CC-Looper

CC-Automation
Midi Control Change MotionSequencer - for Synthesizer with LEDRINGS

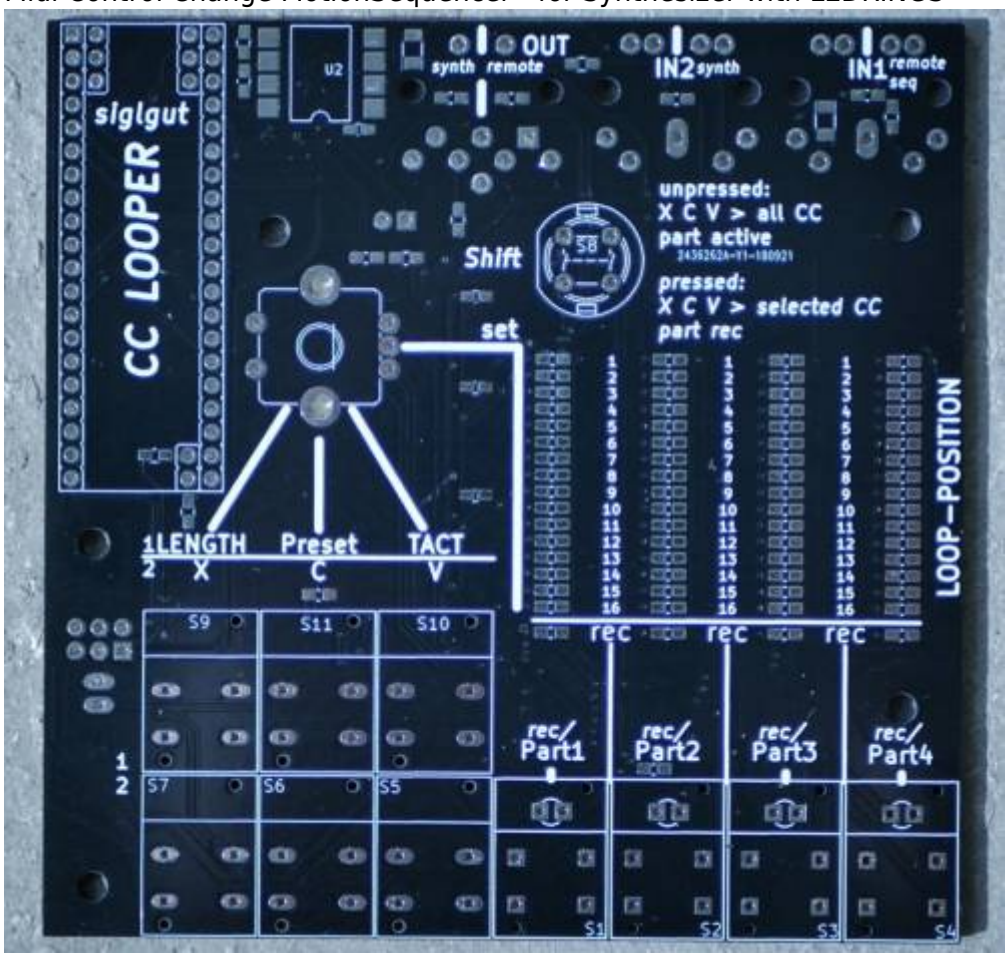

Features

* 4Midichannels @ each 512Steps X 32th-looprate X 128 CCs
* only a few of the 128CC should be used @ once - 4x128xCCs @ 32th is Midi Data MESS and µC Death
* maybe only 256Steps, will depend on RAM…. RealWorld will tell
* each TRACK has a shared Track length for all its 128 CCs
* Copy, Paste, Clear: for the all 128CCs/or single CC
* There is no EDIT, you can clear a CC or Track and make a new Take
* ProgramChange Load and Store on microSD-Card, Load and Store are CC-Commands, so you can remote the device
* The Sequencer can be set to Tact Systems: 3/4 4/4 5/4 7/4 9/4 11/4 13/4

Hardware Requirements

External Requirement:(for example)

- You need a Synth with LEDRINGs - otherwise you have no Feedback and Overview - NordRack III is such one
- Melody/Clock Source with ProgramChange-Output: midibox_seq_v4l oops that dont do PC...
- Melody/Clock/CC Destination: NordRack III or any other Synth with Visual Feedback off CC-States

Midibox:

- dipcoref4 - this is the µC Brain for the Looper
- cc-looper - this is the UI-PCB of the Looper
- no other PCBs needet

- µSD-Card, formated with FAT32
- Soldering Iron - with a Dip that can Handle SMD-Parts, Wires, solder Paste for the µC....
- USB Power Supply with µUSB-Connector

Set

Cabeling

Midi IN1 »> MelodySequencer and Remote Devices
Midi IN2 »> Midi Out from Synthesizer - which sends out the Moved CCs
Midi OUT »> Midi IN of Synthesizer input (Automated CCs merged with mididata from Midi IN1)

Software

Firmware

Fix Me! Firmware not made yet

Building

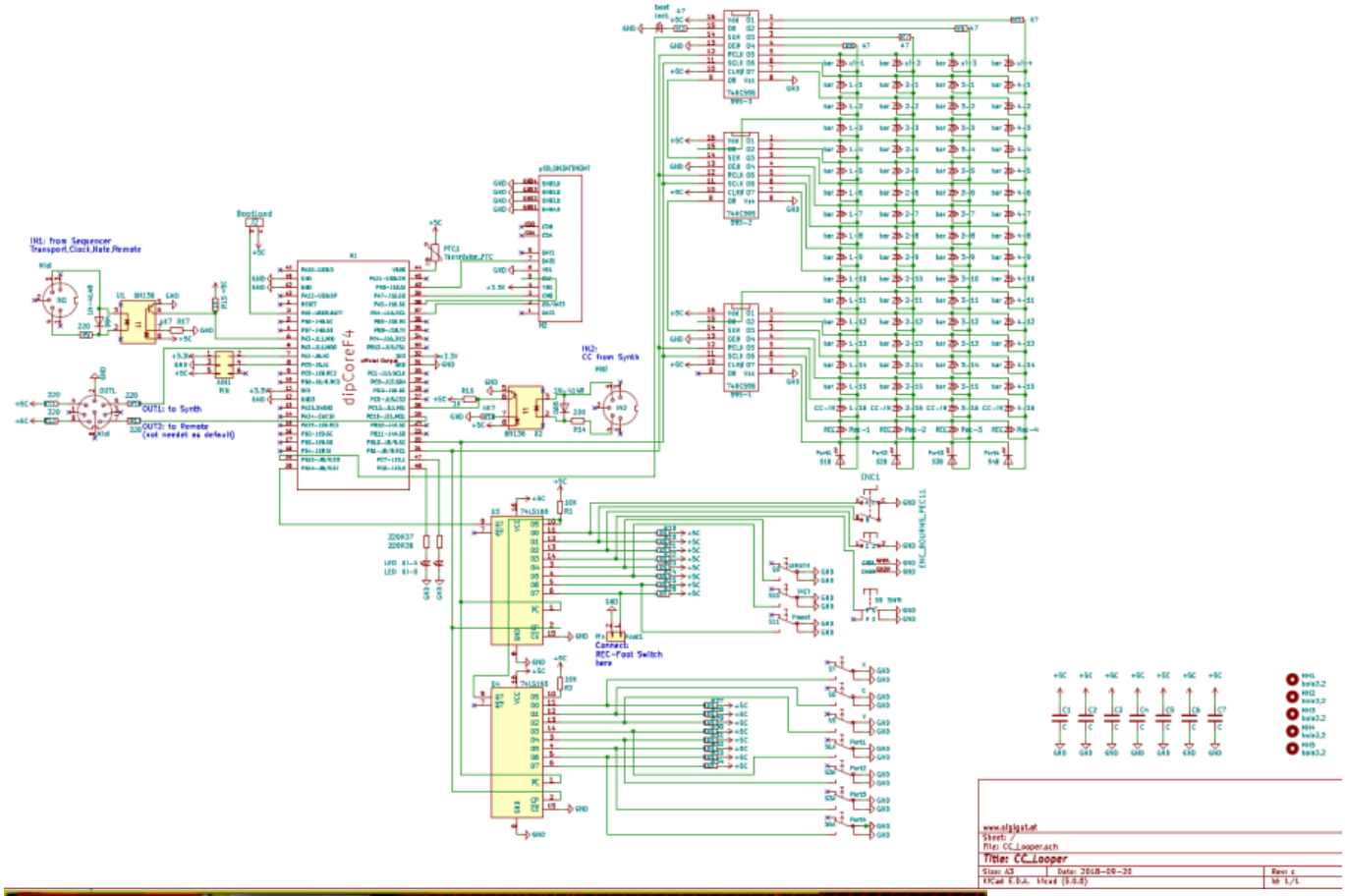
IN1: from Sequencer
Transport,Clock,Note,Remote
OUT1: to Synth
OUT2: to Remote
(not needed as default)
IN2:
CC from Synth
dipCoreF4
Connect:
REC-Foot Switch
here
www.sigigut.at
Sheet: /
File: CC_Looper.sch
Title: CC_Looper
Size: A3
Date: 2018-09-20
Rev: c
KiCad E.D.A. kicad (5.0.0)
Id: 1/1

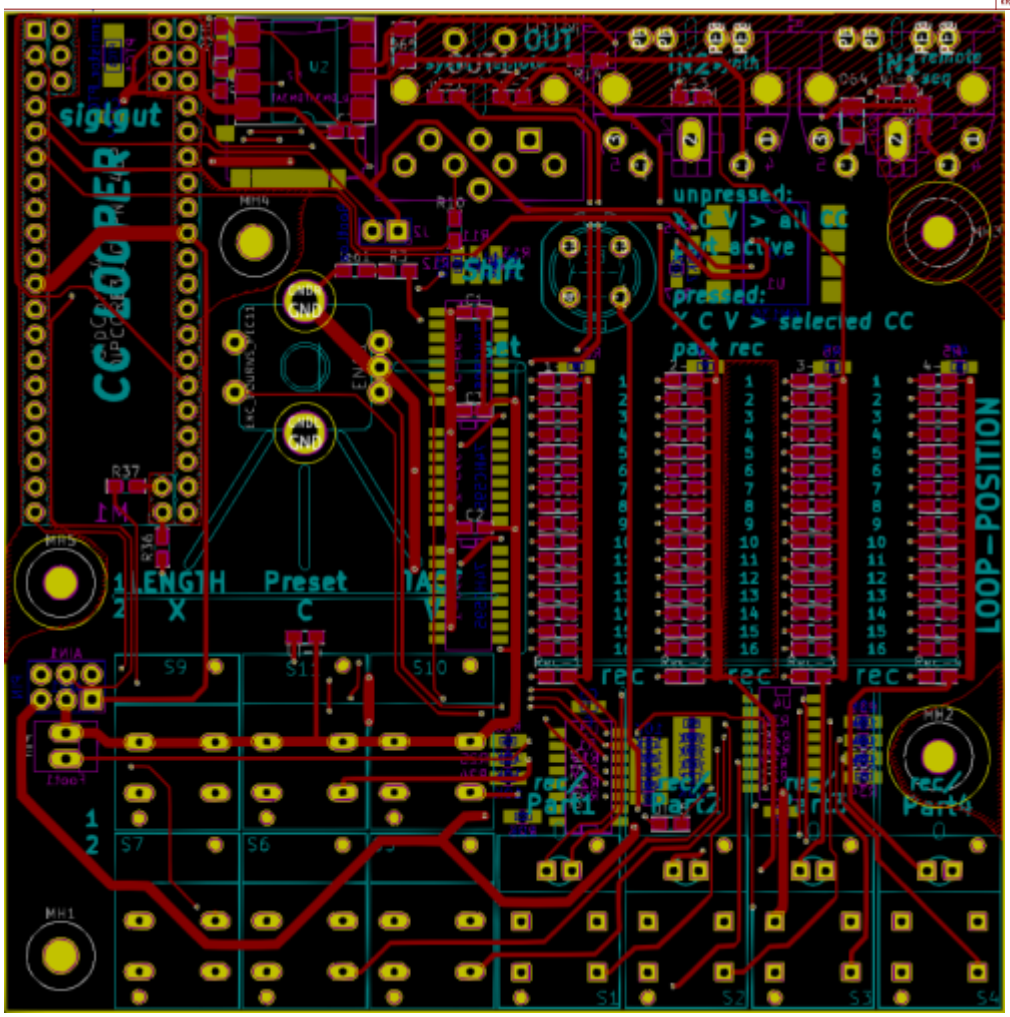
sigigut
CC LOOP PLAYER
OUT
IN2 synth
IN1 remote seq
unpressed:
CV > all CC
not active
pressed:
CV > selected CC
part rec
Shift
Preset
C
LENGTH
X
rec
Part1
Part2
Part4
LOOP-POSITION
MH1
MH2
MH4
MH5

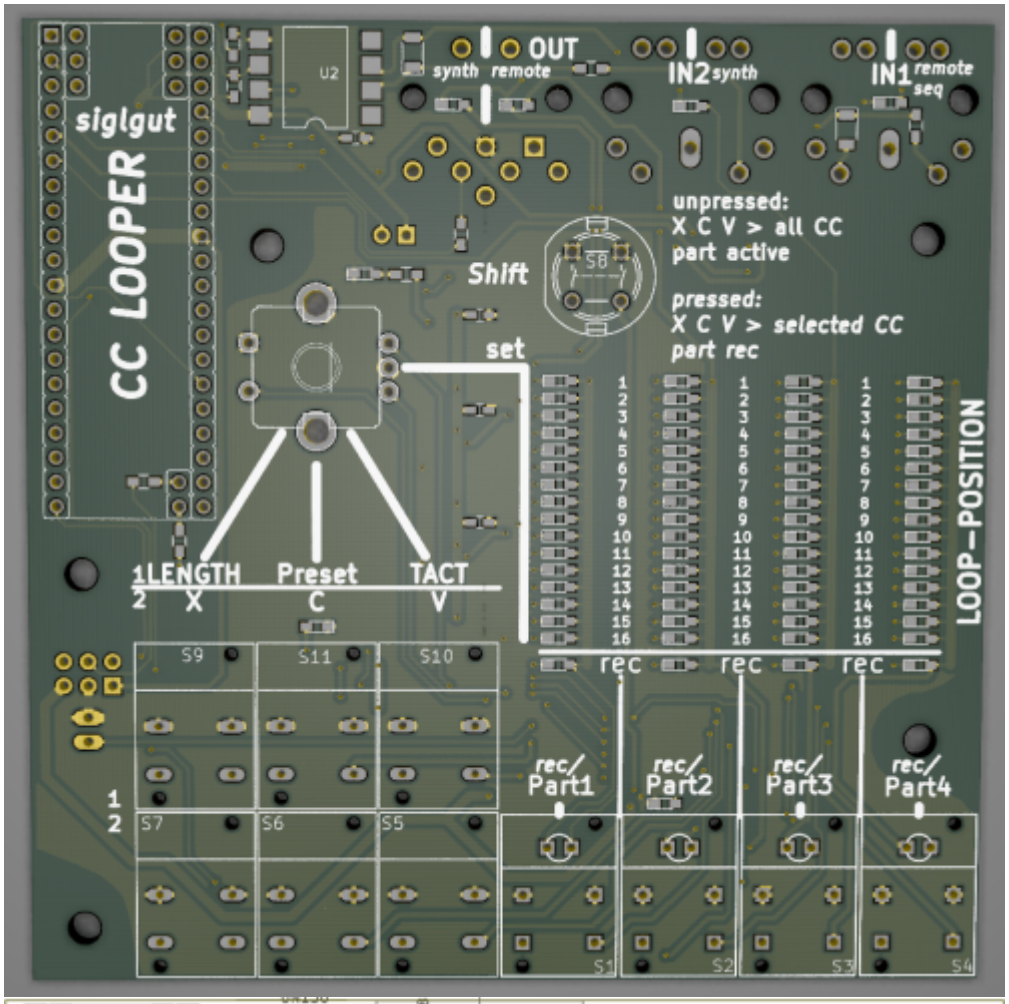
siglgut
CC LOOPER
OUT
synth remote
IN2 synth
IN1 remote seq
unpressed:
X C V > all CC
part active
pressed:
X C V > selected CC
part rec
Shift
set
1LENGTH
2 X
Preset
C
TACT
V
LOOP—POSITION
rec
rec/ Part1
rec/ Part2
rec/ Part3
rec/ Part4
S9
S11
S10
S7
S6
S5
S1
S2
S3
S4

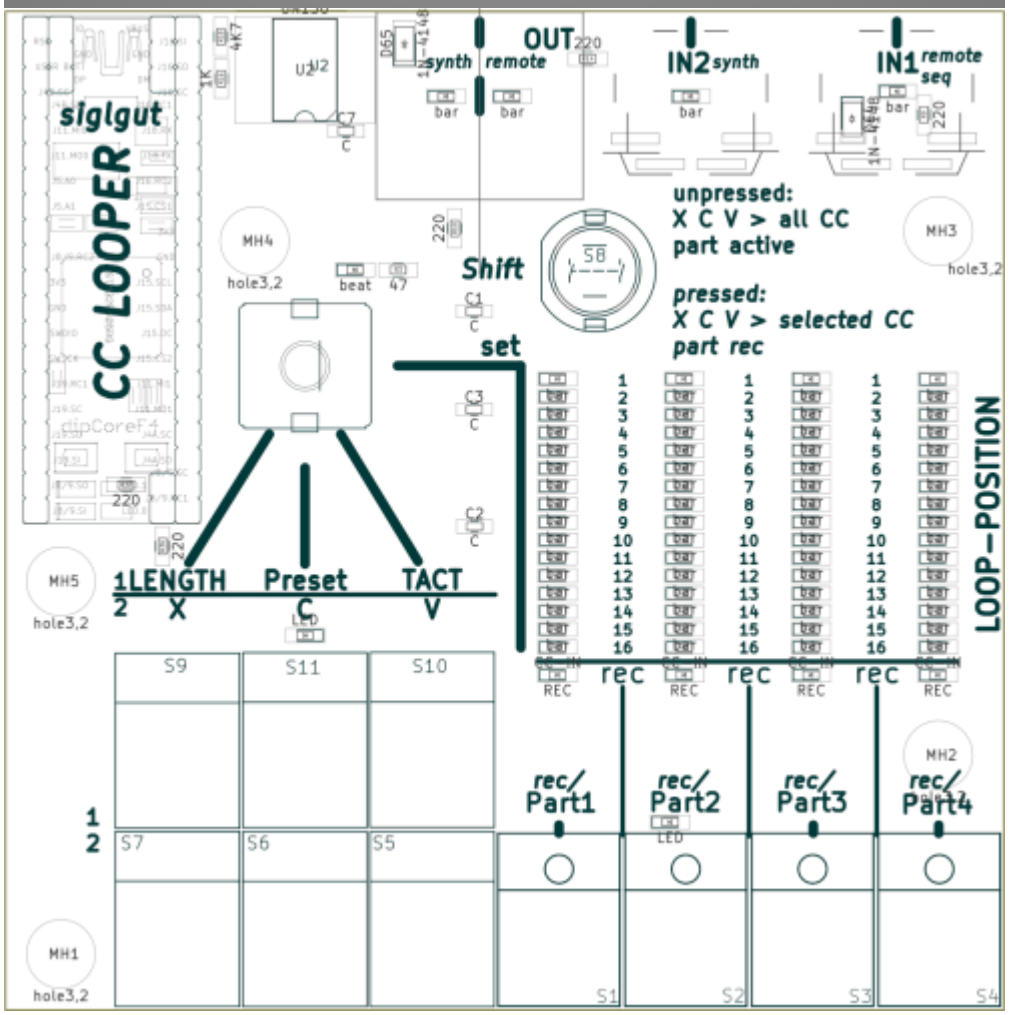
siglgut
CC LOOPER
OUT
synth remote
IN2 synth
IN1 remote seq
unpressed:
X C V > all CC
part active
pressed:
X C V > selected CC
part rec
Shift
set
1LENGTH
2 X
Preset
C
TACT
V
LOOP—POSITION
rec
rec/ Part1
rec/ Part2
rec/ Part3
rec/ Part4
S9
S11
S10
S7
S6
S5
S1
S2
S3
S4
MH1
MH2
MH3
MH4
MH5
hole3,2

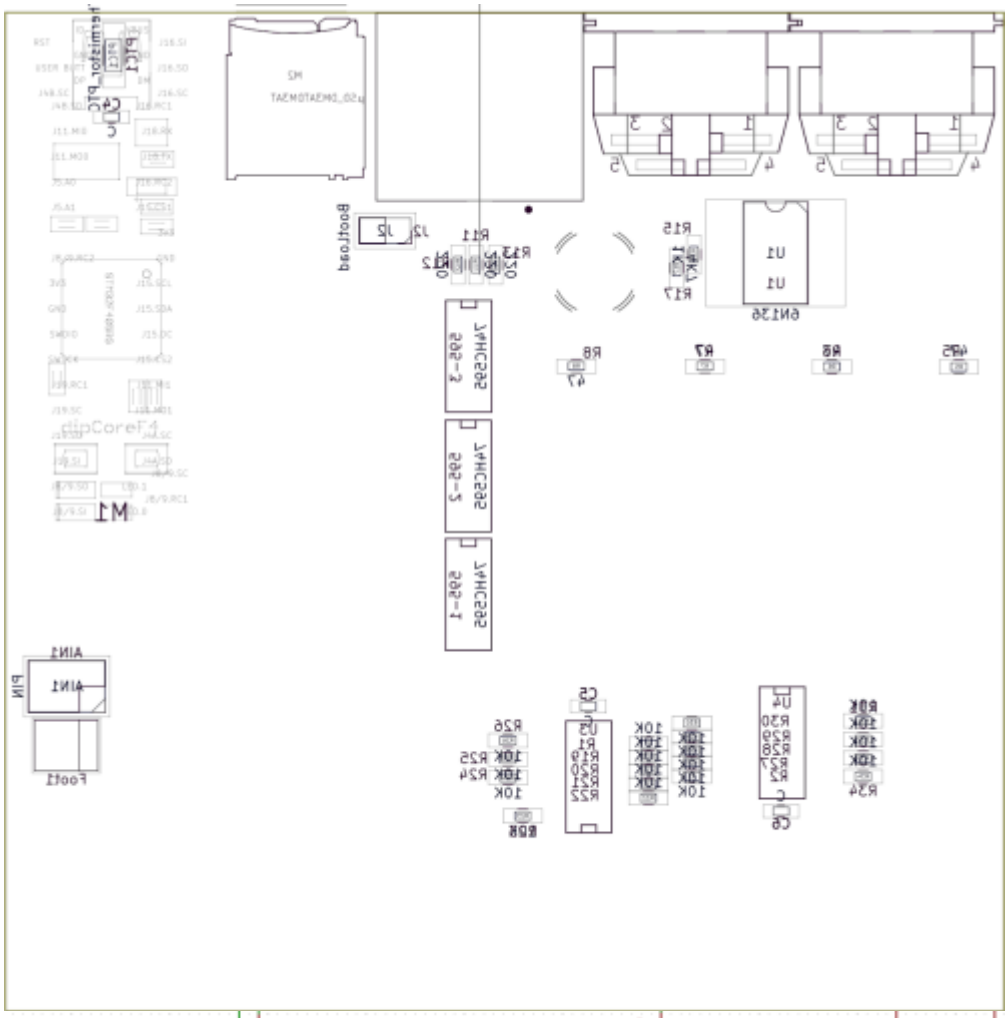

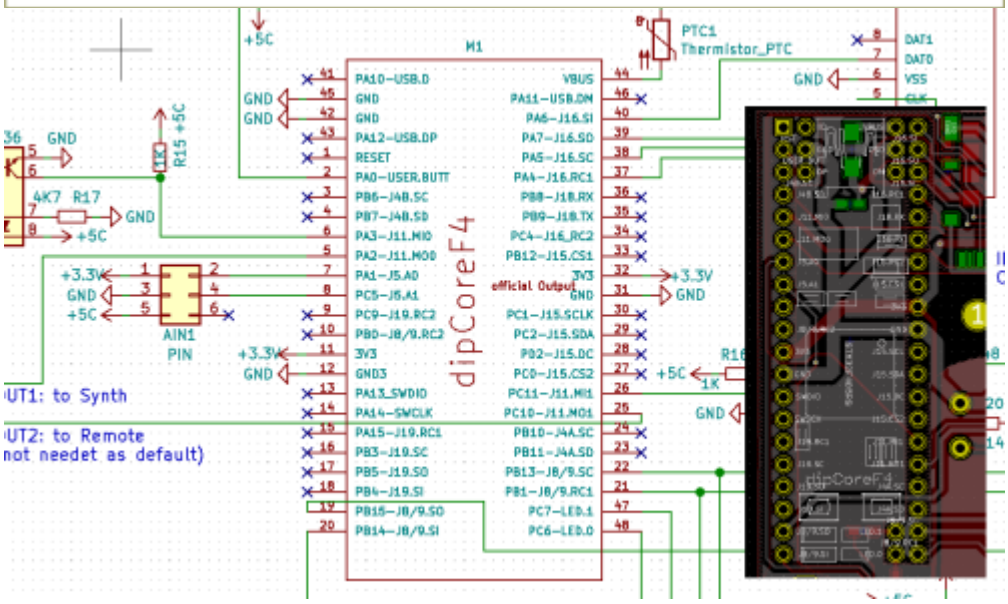

Frontpanel

Fix Me! - a clear Acrylic Frontplate, with NO Engravings, UI-Labeling is viewable from PCB

Case

BOM

Ref	Qty	Value	Footprint	MouserPart	
C1 – C7	7	100nF	0603 Capacitor	81-GRM33C71C104ME14D	Mouser
Rec–1 – Rec—4, UI–5 UI—4, led1, -1 -2 -3 -4	11	REC, LED, beat, CC-IN,	0603 LED	630-ASMT-RR45-AQ902	Mouser
1-16 (LED-BAR)	64	bar	0603 LED	755-SMLEN3WBC8W1	Mouser
D64 D65	2	1N-4148	1206 Diode	833-1N4148W-TP	Mouser
PTC1	1	Thermistor_PTC	1206 Resistor	576-1206L150THWR	Mouser
R1, R2, R19 – R34	18	10K	1206 Resistor	603-AC0603FR-0710KL	Mouser
R3 R5 R6 R7 R8	5	47	1206 Resistor	603-RC0603FR-0747RL	Mouser
R9-R14, R36, R37	8	220	1206 Resistor	603-RC0603FR-07220RL	Mouser
R15 R16	2	1K	1206 Resistor	603-RC0603JR-071KL	Mouser
R17 R18	2	4K7	1206 Resistor	603-RC0603FR-074K7L	Mouser
OUT1	1	Midi	DIN-8-SDF-80J	490-SDF-80J	Mouser
M1	1	DIPCORE32_CMPNT_48P	517-929870-01-20-RA	DIP-40	Mouser
S8	1	Shift	DT6	611-D6R00F1LFS	Mouser
S1 – S4	1	Part1	611-SERWHAUOA	DTL2-1-LED	Mouser
S5 – S7, S9 – S10	6	X,C,V,Len,Pre,Tac	611-SERRDAUOA	DTL2-1-NO-LED	Mouser
ENC1	1	ENC_BOURNS_PEC11	ENC_BOURNS_PEC11+SW	652-PEC11R-4215F-S24	Mouser
IN1 IN2	2	Midi	Midi-Socket-MAB5SH-DIN-5	566-MAB5SH	Mouser
Foot1	1	Pin			
J2	1	BootLoad			
AIN1	1	PIN			
U1 U2	2	6N136	SMDIP-8_W11.48mm	782-6N136-X009	Mouser
-595	3	74HC595	SO-16-N	621-74AHC595S16-13	Mouser
U3 U4	2	74LS165	SO-16-N	595-SN74LS165ADR	Mouser
M2	1	µSD_DM3ATDM3AT	MSD_DM3AT	798-DM3AT-SF-PEJM5	Mouser

To Do

alot, beta test, programming the firmware, housing

Resources

KiCad-Dataccl-dipcore.7z
its based on a mixture off:

- msq-cc-lre
- msq-cc-bcr

but its a complete new design, and firmware

Community users working on it

- **Phatline** = Programming, Documentation…

Just let a Private message on the forum to user already involved.
I have 10 ProtoBoards here - i test one, and if it works, i can share them for Beta Testing-if you pay the postage

From:
http://www.midibox.org/dokuwiki/ - **MIDIbox**

Permanent link:
http://www.midibox.org/dokuwiki/doku.php?id=cc-looper&rev=1585584968

Last update: **2020/03/30 16:16**