MB-ModulBox NG

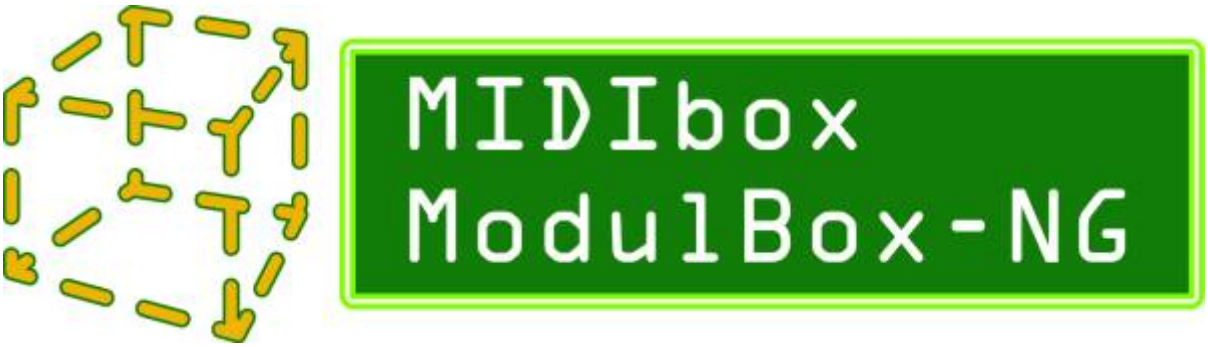

*Under Heavy Developpment @ **9/8/2016***

Introduction

The MB-Modulbox-NG Project is a modern version of the **Modulbox** project .
In short words, it's a **Eurorack-size compliant Modular MIDIbox Control Surface** based upon MB-NG.

From a **Main Part,small modules would be chained to Build the custom-sized control surface of your dreams by choosing the MIDI controls you want**.

Main part would also allow **Access to Menus for configuring and saving things on SD Card** , and optionnal **External Analog Inputs/Outputs** to trigger from external sensors and/or drive your analog synth.

Each Small Module will have a Different type of Interaction and will include Digital Shift Registers and/or Multiplexers For Analog lines . Then modules would be chained one to another up to main part.

Modules **Chain Connectors will be 2.54mm dual row pinheader** (Molex?) and will carry Digital/Analog bus lines and Current supply. PSU Main input will be on main part PCB.

Main Part Features

1. Core32 Board
2. **Standard Control Surface** with 6 Tactile switches, Push - Encoder ,**OLED** Graphical screen
3. **SD Card Slot+USB in**
4. **2xMIDI IN + 2xMIDI OUT 2.5mm jack Plugs**
5. **Optionnal 16×3.5mm jacks** for external **Analog Ins/Analog Outs** with External interfaces for expanding.

Community users working on it

- **Ksir** - Modulbox Original Designer - PCB Design - Programming
- **Psykhaze** - Documentation - Frontpanel design - PCB Design - Programming
- **Latigid On** - Technical support - PCB Design

Getting Involved ?

Just let a Private message on the forum to users already involved

Software Tools used

- **Inkscape Vector Drawing Software** - Front panel Concept Drawing
- **KiCAD PCB** - PCB Design | **KiCAD Librairies**
- **FreeCAD 3D Technical Drawing** - Case Design
- **Code::Blocks Integrated Development environment** - GUI Software - MIOS programming
- **JUCE** - Cross-Platform Audio/MIDI/GUI Library

Architecture

Modulbox-NG

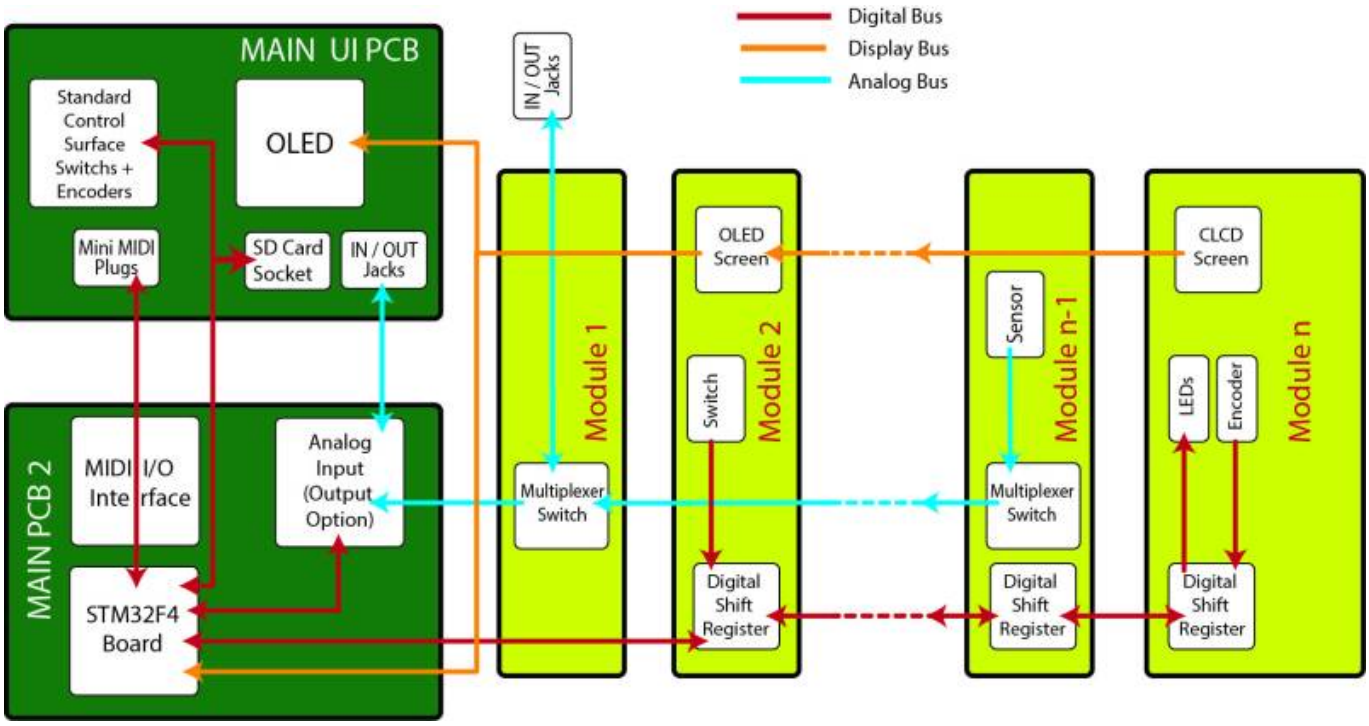

Eurorack design

- **Eurorack Design is 3U Height** So frontpanel *=5,25“=133mm-rails=***128,5mm** Height . Sandwich Design is ok here due to non heating components and allow to spare space.
- **Modules Frontpanels are 8HP-multiple wide** *(8HP=***40,3mm***)* see ***Eurorack Specification***.
  Frontpanel back spacers glued with JB-weld to avoid front screwing. **Eurorack Templates PDF**
- **PCB Size is 100mm height** To stay compliant to ***Eurocard Specification***

Splitted View

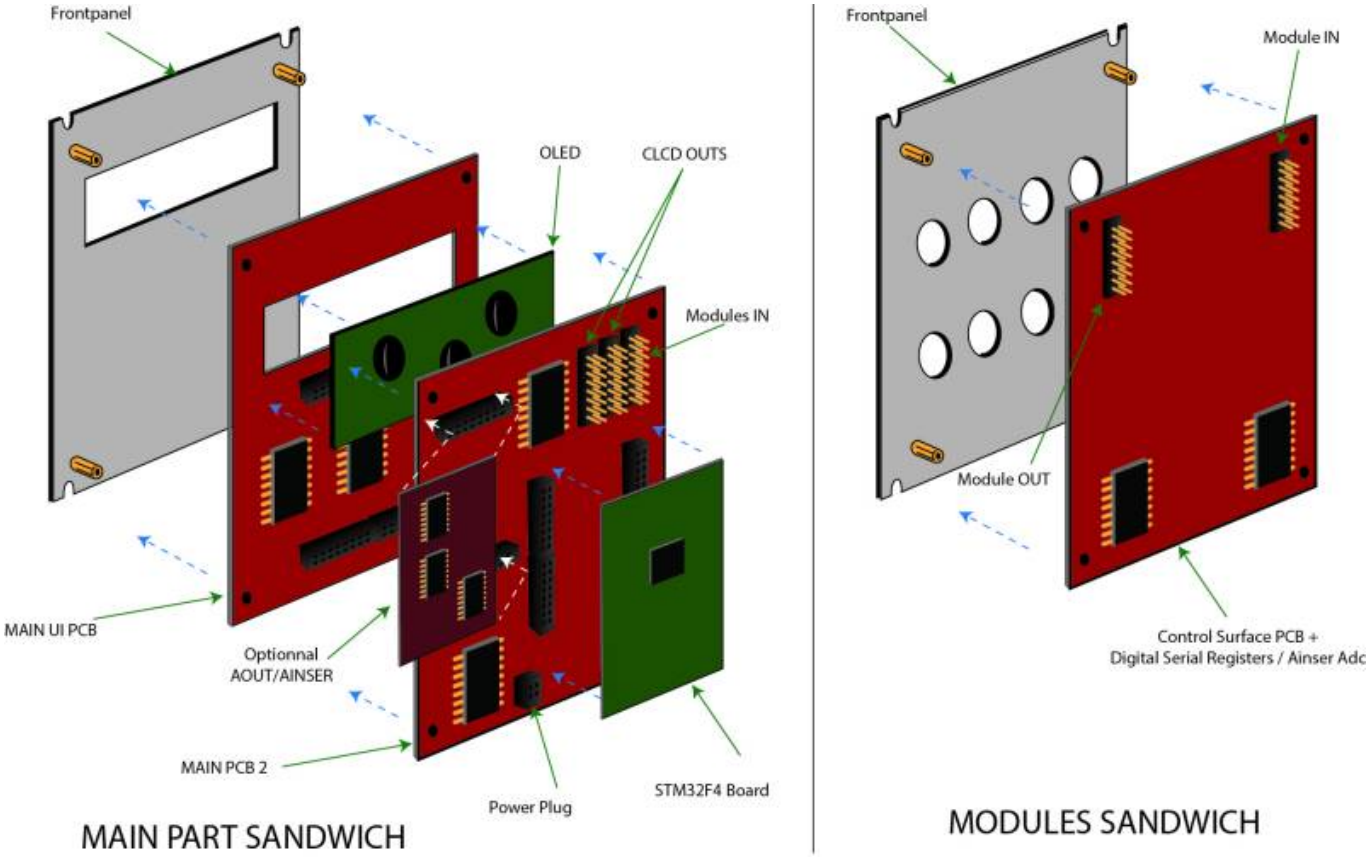

Tech Demos Videos

Video

Video

Video

Video

Video

Modules List + UI Parts

Module	N°	Analog	LED	Encoders	Switches	HP	User	Display
Main UI+Main PCB	1	Jacksx16		x1 PushRotary	Tactilex6	24	Psykhaze	Graphic-OLEDx1
Horizontal 4xOLEDS SCSE	2			x1 PushRotary	Tactilex7	24		Small-OLEDx4
Vertical 4xOLEDS	3					16		Small-OLEDx4
LCD Vertical SCS	4			x1 PushRotary	Tactilex(4+4+2)	16		CLCD 20×4
LCD Horizontal SCSE	5			x2 PushRotary	Tactilex22	32	Psykhaze	2xCLCD 40×4
Encoders x8	6			x8 PushRotary		8	Ksir	
Pots x8	7	Pots x8				8	Ksir	
LED Ring Encoders x4	8		16×4 3mm	x4 PushRotary		8		
Faders 2×2	9	Fadersx4				8		
Light-Fader 2×2	10	Light-Fadersx4				8		
Long Faders x2	11	Long Fadersx2				8	Psykhaze	
Motor Fader x1	12	Motor Fader	16x3mm			8	Psykhaze	
Switches x8 A	13				Tactilex8	8	Ksir	
Switches x8 B	14		8xBicolor		Toggle 3 polesx8	8	Ksir	
Light-Switches x8 A	15		Bicolor Opt		Light Tactilex8	8	Ksir	
Light-Switches x8 B	16				Light Togglex8	8	Ksir	
Numeric Displayx2	17			x2 PushRotary		8		2x Numeric
Numeric Displayx4	18			x4 PushRotary		16		4x Numeric

Module	N°	Analog	LED	Encoders	Switches	HP	User	Display
8×8 LED Modulation Matrix	19		x(8×8)3mm		Tactilex(8+8)	16		
16×16 LED DotMatrix	20					16	Psykhaze	4xDotMatrix
8×16 RGB DotMatrix	21					16	Psykhaze	2xDotMatrix
Additional Analog In or Out Interface	22	Jacksx8		x8 PushRotary	Toggle 4 polesx2	16	Psykhaze	Small-OLEDx2
Crosspoint Matrix 8×4(x4)	23	Jacksx(8+4)	x(8×4) 3mm		Toggle 4poles, Tactilex(8+4)	16	Psykhaze	
Adafruit Silicon 3mm 8×8 Matrix	24		x(8×8)3mm		Adafruit Silicon (4×4)x4	24	Psykhaze	
Joystick	25	2xJoystick	2xRGB			8		
Linear Touch	26	1x(Force)Linear Sensor	8xWS2812			8	Psykhaze	
Circular touch	27	1x(2x)Circular Sensor	16(x2)xWS2812			16	Psykhaze	
Force touch	28	4xForce touch	4xRGB			8		
MiniDeck DJ Control	29	1xScratchFader+ 1xVertical Fader	x8 3mm	x1 Code Wheel +x3 PushRotary		32		

Frontpanels Layouts

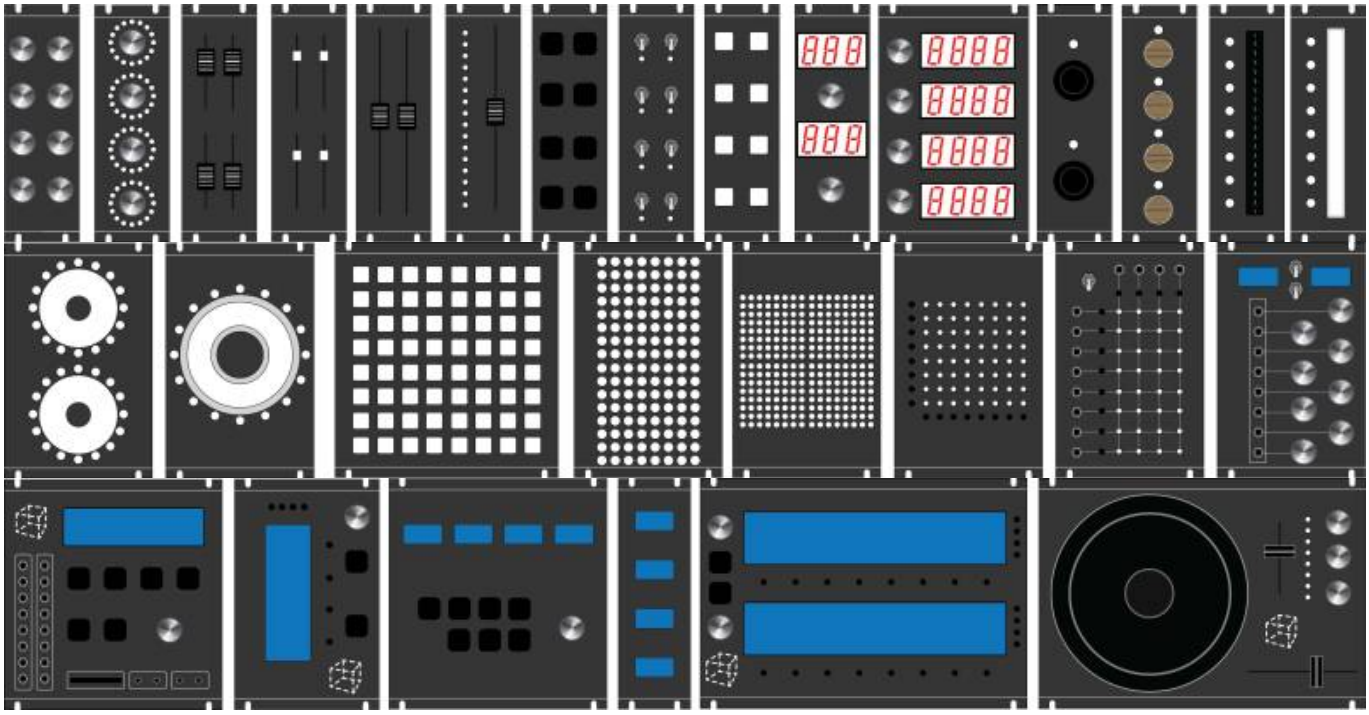

Modules Ins/Outs + Related Parts

.	1	2	3	4	5	6	7	8	9	10	11	12	13	14	15
Digital Ins	8	0>16	/	12	30	16	/	8	/	/	/	?	8	24	8
Digital Outs	/	/	/	/	/	/	/	16	/	/	/	16+?	/	16	8>16
Analog Ins	/	/	/	/	/	/	16	/	8	8	4	?	/	/	/
CLCD #	/	/	/	1	2	/	/	/	/	/	/	/	/	/	/
OLED #	1	1>8	4	/	/	/	/	/	/	/	/	/	/	/	/

.	16	17	18	19	20	21	22	23	24	25	26	27	28	29
Digital Ins	16	4	8	16	/	/	24	15	32	/	3	/	/	12
Digital Outs	8	16	32?	16	16	32	/	16	/	6	/	/	12	8
Analog Ins	/	/	/	/	/	/	0>8	/	/	8	/	3>6	8	8
CLCD #	/	/	/	/	/	/	/	/	/	/	/	/	/	/
OLED #	/	/	/	/	/	/	1	/	/	/	/	/	/	/

Parts References

Parts Datasheets

Designation	Datasheet Link	Reference
Switch Rotary Encoder	Alps EC11E	EC11E15244B2
5mm RGB LED	RGB LED	SL-R596CR4G3B5W-F12
Tactile Switch	Small Round Tactile Switch	SKHHDTA010
Tactile Switch 2	Square Tactile Switch	03.0752
Light-Tactile Switch	Square Light Tactile switch	B3W-9000-G1N, B3W-9000-R1N, B3W-9000-Y1N, B3W-9000-RG2N
Toggle Switch 3/4 Poles	Toggle Switch	100SP1T2B3M2QEH
Light-Toggle Switch	Light Toggle Switch	G12JPCF
Code Wheel+ Optical Encoder	Encoder+ Code Wheel	HEDB-9100-C12
Fader	Bourns PTA	PTA3043-2015CPB103,PTA6043-2015CPB103
Long Fader	ALPS RS series	RSA0N11S9A0K
Long Fader 2	Bourns PTB	PTB0143-2010BPB103
Light-Fader	Bourns PTL	PTL30-10G1-103B2, PTL30-15R1-104B2, PTL60-10G1-103B2, PTL60-15R1-104B2
Motor Fader	Alps MotorFader 60mm	RS60N11M9A0F
Rotary Pot	ALPS Rotary pot	RK09L1140A66
SD Card Socket	SD Socket	SDCRD-GM-271
OLED 256x64px 3,12”	Newhaven OLED	NHD-3.12-25664UMY3
OLED 256x64px 3,2 “	3.2" OLED	ER-OLEDM032

Designation	Datasheet Link	Reference
OLED 128x64px 0,96”	0.96" OLED	ER-OLEDM0.96
CLCD 20×4	20x4 LCD	ERM2004
CLCD 40×4	40x4 LCD	ERM4004
8×8 Monochrome DotMatrix	8x8 Dotmatrix	TC15-11EWA
8×8 RGB DotMatrix	8x8 RGB Dotmatrix	YSM-2388CRGBC
3 Digits Numeric Display	3 Digits Numeric Display	BA56-12SRWA
Silicon 4×4 Button Matrix 5mm	Silicon 4x4 5mm Button Matrix	/
Silicon 4×4 Button Matrix 3mm	Silicon 4x4 3mm Button Matrix	/
Joystick 1	Joystick 1	/
Joystick 2	Joystick 2	/
Force Touch Sensor	Interlink FSR402	34-00015
Ring Sensor	Interlink Ring Sensor	40-24131
Linear+Force Sensor	Interlink linear+force sensor	34-00022
Linear Touch Sensor	SpectraSymbol SoftPot	SP-L-0100-103-ST
Circular Touch Sensor	SpectraSymbol SoftPot	SP-R-0046-103-ST

Buy Places

- **Mouser**
- **Buydisplay**

- Interlink Force Sensors @ Digikey
- Interlink Ring Sensor @ Roboshop
- SpectraSymbol Circular Tactile Sensor @Adafruit
- SpectraSymbol Linear Tactile Sensor @Adafruit

Software / Firmware

- **JUCE Ressources**

A **GUI** will be developped with JUCE Library to make your **MIDI mapping** upon your custom control interface and make your **custom infos display on OLED / CLCDs / LEDs Matrixes**. Upon a list of **Pre-made functions**,you would be able to connect a **MIDI mapping** to Controller / Sequencer / Other MIDIbox apps functions into the JUCE GUI

TODO:Make a inkscape sketch For the JUCE GUI then remake it with **Projucer**

From:
http://www.midibox.org/dokuwiki/ - **MIDIbox**

Permanent link:
http://www.midibox.org/dokuwiki/doku.php?id=mb-modulbox-ng&rev=1471221891

Last update: **2016/08/15 00:44**