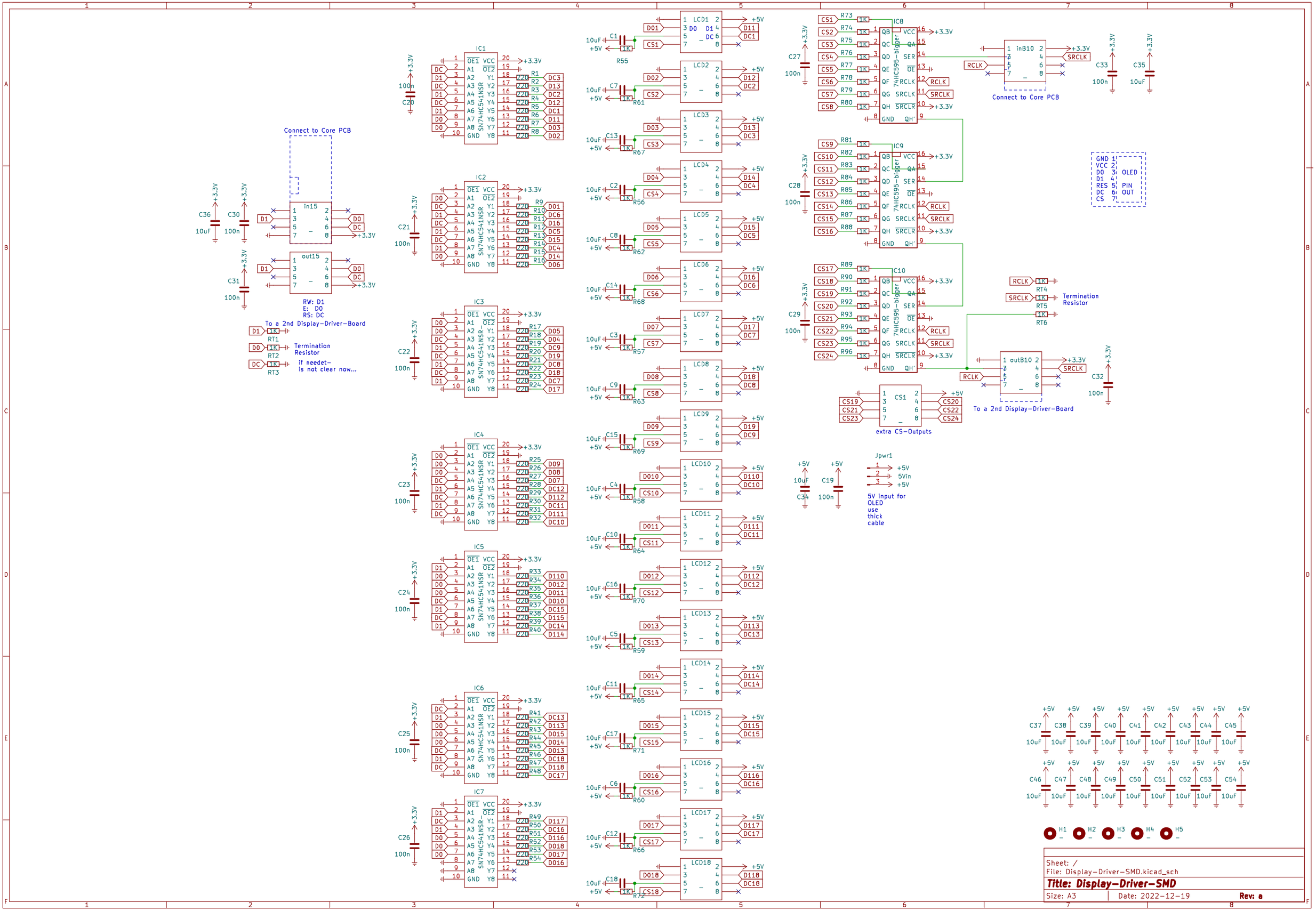
Connect to Core PCB
in15
out15
RW: D1
E: D0
RS: DC
To a 2nd Display-Driver-Board
Termination Resistor
if needed-
is not clear now...
IC1
IC2
IC3
IC4
IC5
IC6
IC7
SN74HC541NSR
IC8
IC9
IC10
74HC595-bigger
inB10
outB10
CS1
extra CS-Outputs
GND 1
VCC 2
D0 3
D1 4
RES 5
DC 6
CS 7
OLED PIN OUT
Jpwr1
5Vin
5V input for OLED use thick cable
H1
H2
H3
H4
H5
Sheet: /
File: Display-Driver-SMD.kicad_sch
Title: Display-Driver-SMD
Size: A3
Date: 2022-12-19
Rev: a