„MF_NG“ (ucapps.de) with ALPS Motorfader RSAON11M9-LIN10K (reichelt.de)
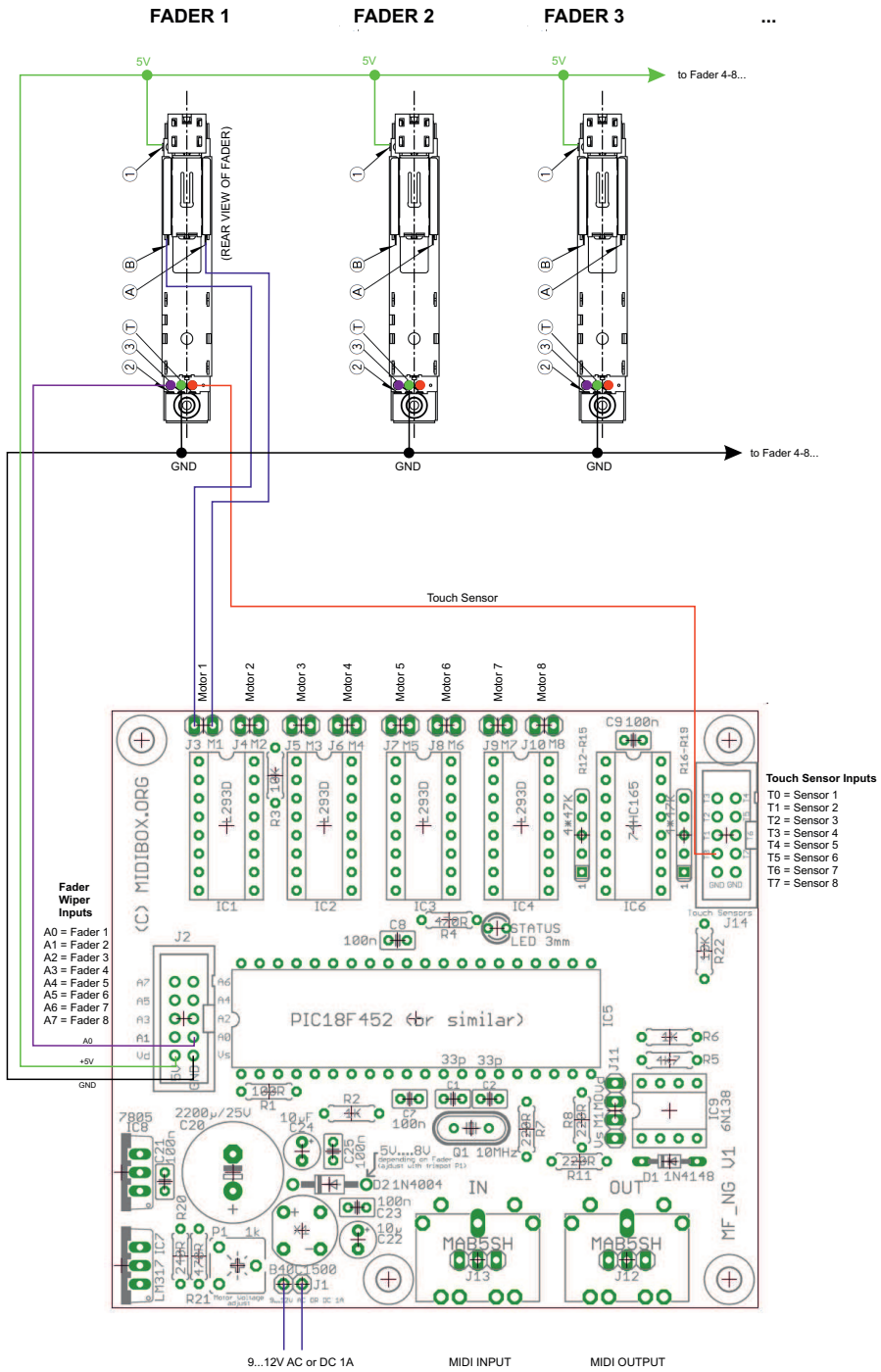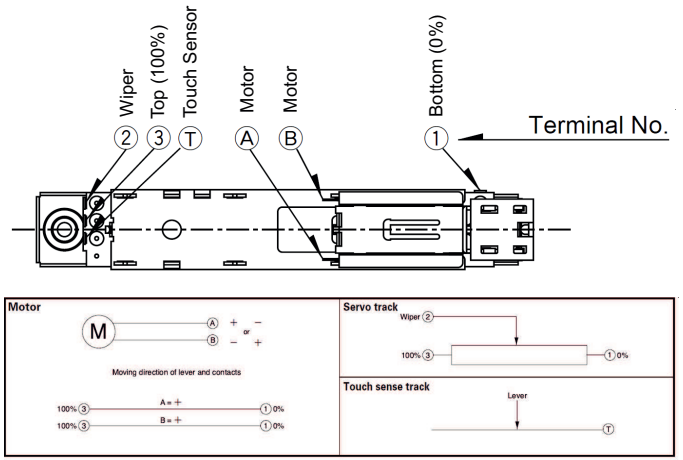
REVISION 3