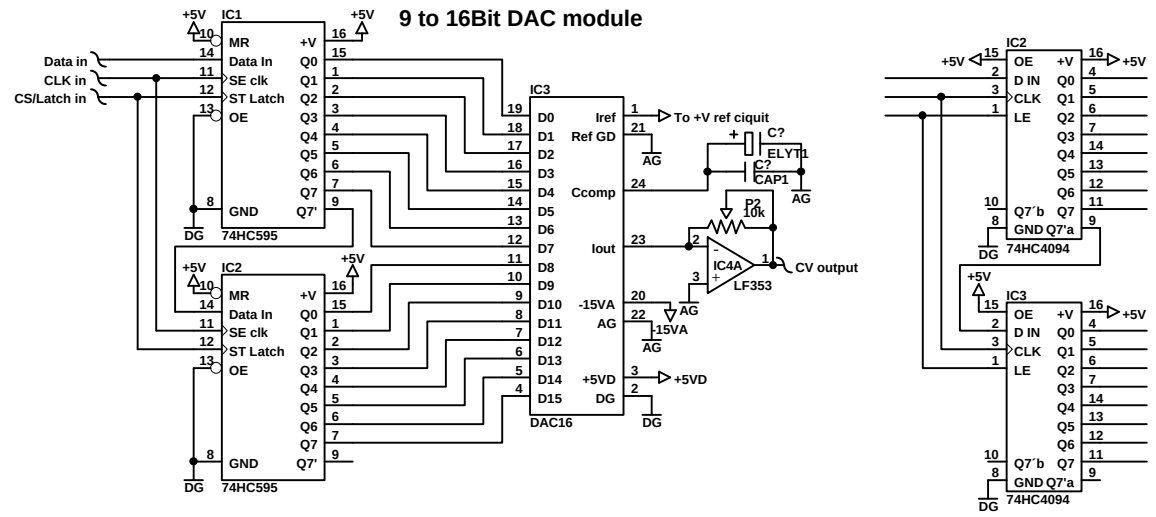

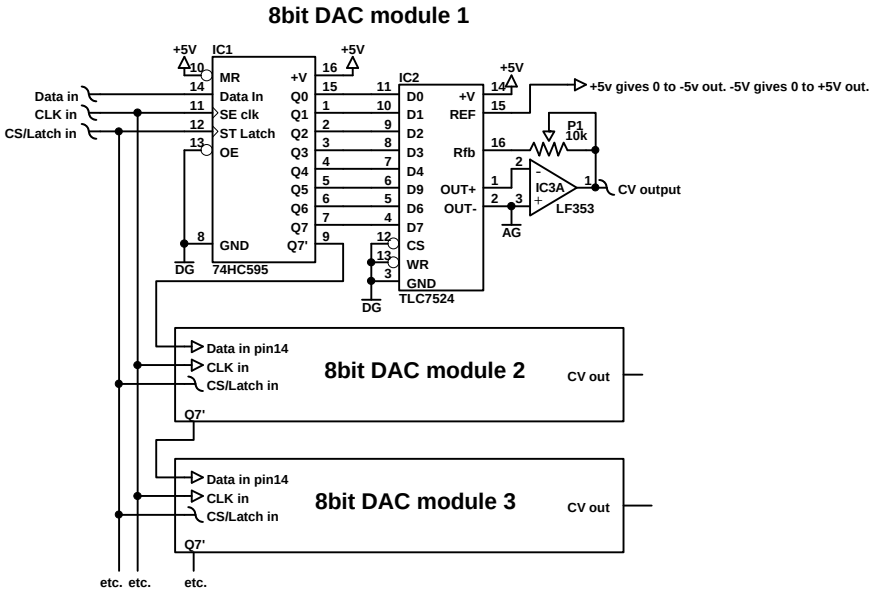

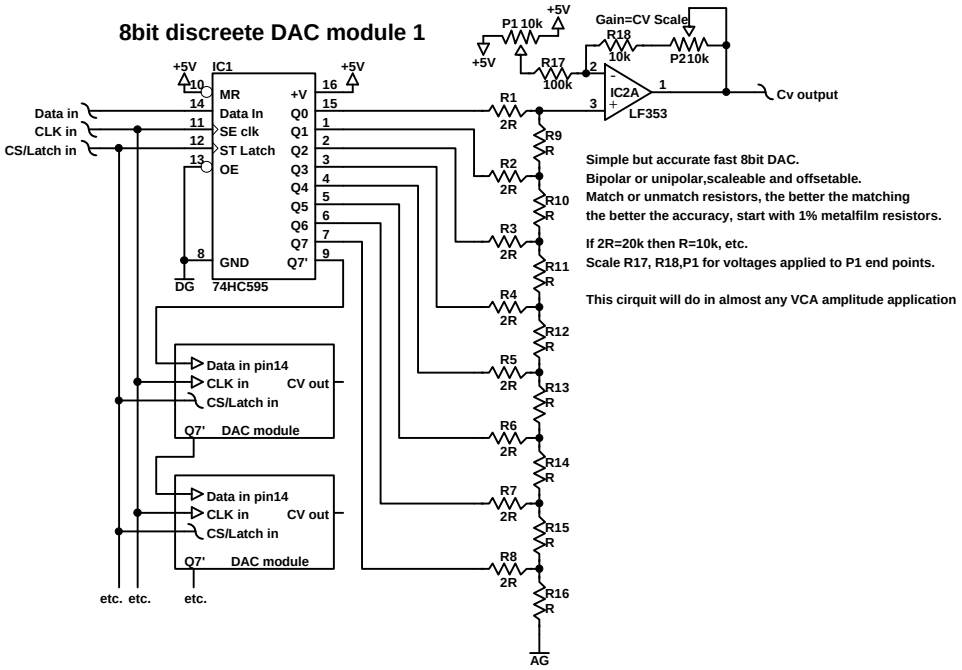

Simple but accurate fast 8bit DAC.
Bipolar or unipolar,scaleable and offsetable.
Match or unmatch resistors, the better the matching
the better the accuracy, start with 1% metalfilm resistors.

If 2R=20k then R=10k, etc.
Scale R17, R18,P1 for voltages applied to P1 end points.

This cirquit will do in almost any VCA amplitude application

Design and drawing by KD. 2005