AOUT_4 module

Using the MAX525 DAC gives nice CVs. The circuit is designed with an improved output buffer. It's possible to switch the gain and and offset for different CV ranges.

Schematic

The DAC portion is essentially the same as the original version:

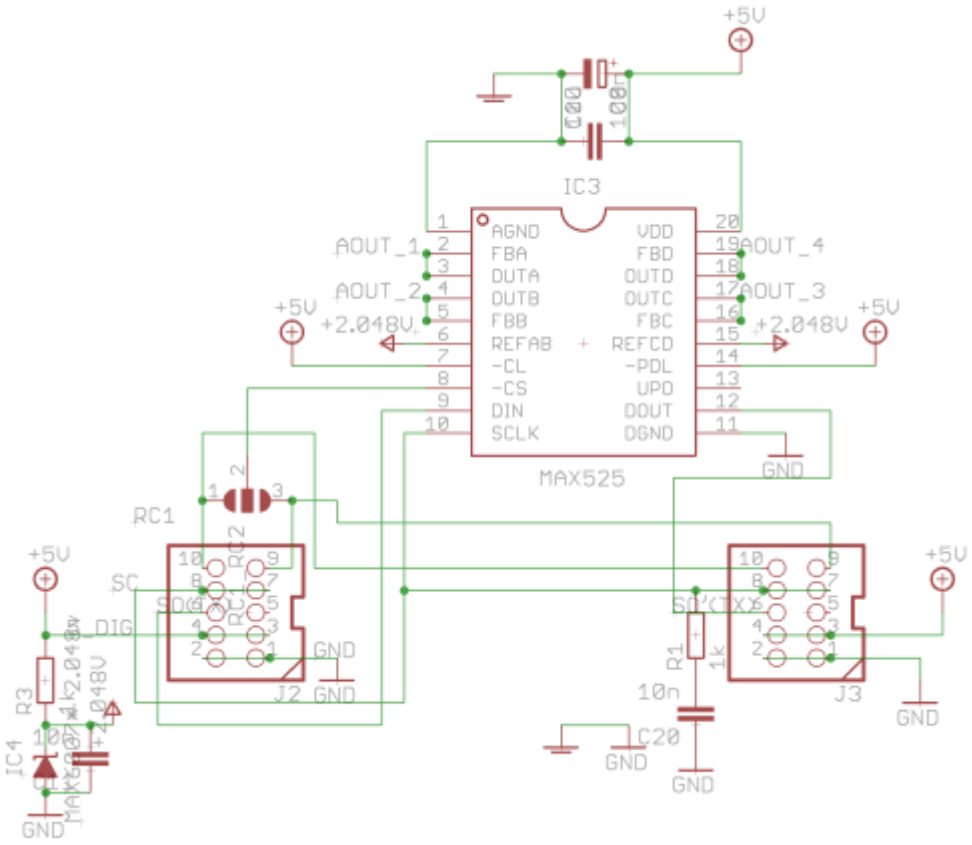

The gates were omitted. Normally RC1 can be used for two cascaded DACs.

The AOUTs each go through a buffer:

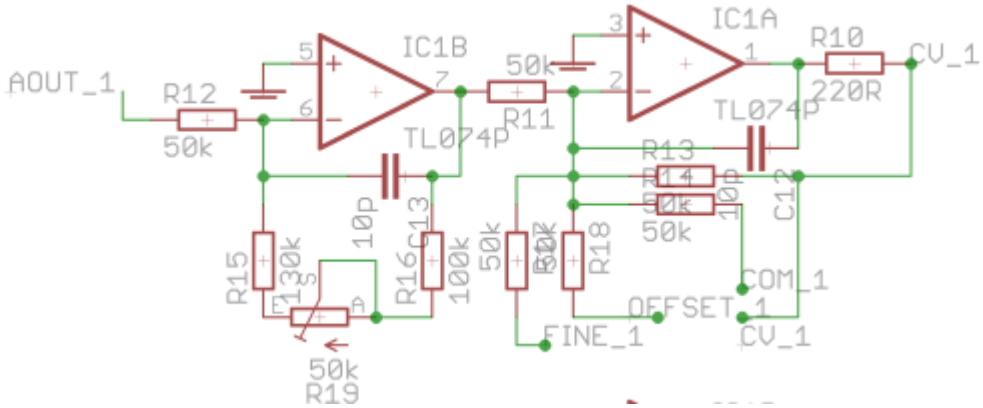

This is a dual inverting-opamp design. The first adjusts the scale of the CV. The second has extra mixer resistors to inject other CVs, such as a fixed offset and/or fine-tune control.

BOM v1.1

Part	Value	Package	Description
C1	10u	E2,5-6	POLARIZED Cap
C2	100n	C025-025×050	CAPACITOR
C3	10u	E2,5-6	POLARIZED Cap
C4	100n	C025-025×050	CAPACITOR
C5	100n	C025-025×050	CAPACITOR
C6	100n	C025-025×050	CAPACITOR
C7	100n	C025-025×050	CAPACITOR
C8	100n	C025-025×050	CAPACITOR
C9	10u	E2,5-6	POLARIZED CAP
C10	100n	C025-025×050	CAPACITOR
C11	10n	C025-025×050	CAPACITOR
C12	10p	C025-025×050	CAPACITOR
C13	10p	C025-025×050	CAPACITOR
C14	10p	C025-025×050	CAPACITOR
C15	10p	C025-025×050	CAPACITOR
C16	10p	C025-025×050	CAPACITOR
C17	10p	C025-025×050	CAPACITOR
C18	10p	C025-025×050	CAPACITOR
C19	10p	C025-025×050	CAPACITOR
C20	10n	C025-025×050	CAPACITOR
C21	10u	E2,5-6	POLARIZED
C22	100n	C025-025×050	CAPACITOR
IC1	TL074P	DIL14	OPAMP
IC2	TL074P	DIL14	OPAMP
IC3	MAX525	DIL20_SML	DAC
IC4	MAX6007*	LM4041A12DBZ	Vref
J1	PINHD-2X54WALL	PINHEADER	
J2	PINHD-2X54WALL	PINHEADER	
J3	PINHD-2X54WALL	PINHEADER	
JP1	PINHD-1X2SMALL	PINHEADER	
JP2	PINHD-1X2SMALL	PINHEADER	
JP3	PINHD-1X2SMALL	PINHEADER	
JP6	PINHD-1X2SMALL	PINHEADER	
JP7	PINHD-1X2SMALL	PINHEADER	
JP8	PINHD-1X2SMALL	PINHEADER	
JP9	PINHD-1X2SMALL	PINHEADER	
JP10	PINHD-1X3SMALL	PINHEADER	
JP11	PINHD-1X3SMALL	PINHEADER	

Part	Value	Package	Description
JP12	PINHD-1X3SMALL	PINHEADER	
JP13	PINHD-1X3SMALL	PINHEADER	
JP14	PINHD-1X3SMALL	PINHEADER	
JP15	PINHD-1X3SMALL	PINHEADER	
JP16	PINHD-1X3SMALL	PINHEADER	
JP17	PINHD-1X3SMALL	PINHEADER	
L1	BEAD	5MM	INDUCTOR
L2	BEAD	5MM	INDUCTOR
R1	1k	0204/7	RESISTOR
R3	1k	0204/7	RESISTOR
R10	220R	0204/7	RESISTOR
R11	50k	0204/7	RESISTOR
R12	50k	0204/7	RESISTOR
R13	50k	0204/7	RESISTOR
R14	50k	0204/7	RESISTOR
R15	130k	0207/2V	RESISTOR
R16	100k	0204/7	RESISTOR
R17	50k	0204/7	RESISTOR
R18	50k	0204/7	RESISTOR
R19	50k	B64Y	trim pot
R20	220R	0204/7	RESISTOR
R21	50k	0204/12_ANDY	RESISTOR
R22	50k	0204/9_ANDY	RESISTOR
R23	50k	0204/7	RESISTOR
R24	50k	0204/7	RESISTOR
R25	130k	0207/2V	RESISTOR
R26	100k	0204/7	RESISTOR
R27	50k	0204/12_ANDY	RESISTOR
R28	50k	0204/7	RESISTOR
R29	50k	B64Y	trim pot
R30	220R	0204/7	RESISTOR
R31	50k	0204/9_ANDY	RESISTOR
R32	50k	0204/9_ANDY	RESISTOR
R33	50k	0204/7	RESISTOR
R34	50k	0204/7	RESISTOR
R35	130k	0207/2V	RESISTOR
R36	100k	0207/2V	RESISTOR
R37	50k	0204/7	RESISTOR
R38	50k	0204/7	RESISTOR
R39	50k	B64Y	trim pot
R40	220R	0204/7	RESISTOR
R41	50k	0204/12_ANDY	RESISTOR
R42	50k	0204/7	RESISTOR
R43	50k	0204/7	RESISTOR
R44	50k	0204/7	RESISTOR

Part	Value	Package	Description
R45	130k	0204/7	RESISTOR
R46	100k	0204/7	RESISTOR
R47	50k	0204/7	RESISTOR
R48	50k	0204/7	RESISTOR
R49	50k	B64Y	trim pot
RC1_RC2	SJ2W	Jumper	(normally as RC1)
VR1		VOLTAGE reg	(optional)

Versions

v1.1: first release.

Assembly

The clearance with the common 3296 series trimpots is quite tight! Although everything does fit, you may wish to place the trimpots in before the surrounding resistors. The resistors could even go on the back of the board, as long as you don't melt the trimmer housings too much. There are smaller trimmers available, but

The 50k value for most resistors is not too important. 47k will work fine.

For best results, get 0.1% resistors or hand-match R11/13/14/17/18, R21/23/24/27/28 and so on.

Headers and jumpers

J1 is a normal Eurorack-style power header. Red stripe = -12V J2 matches a Core J19 header. RC1/RC2 solder jumper: connect only one (RC1 normally) to the centre pad J3 can cascade additional modules. Two can use the same latch (RC1 or RC2).

JP1 is intended as a connector to other boards or for SIP connectors pin order from the part designator: 0V|3v3|0V|-12V|0V|+12V

JP14/15/16/17: the square pin can be connected to an offset voltage for fine tuning. This will need some reference to the +/-12V rails.

JP6/7/8/9:

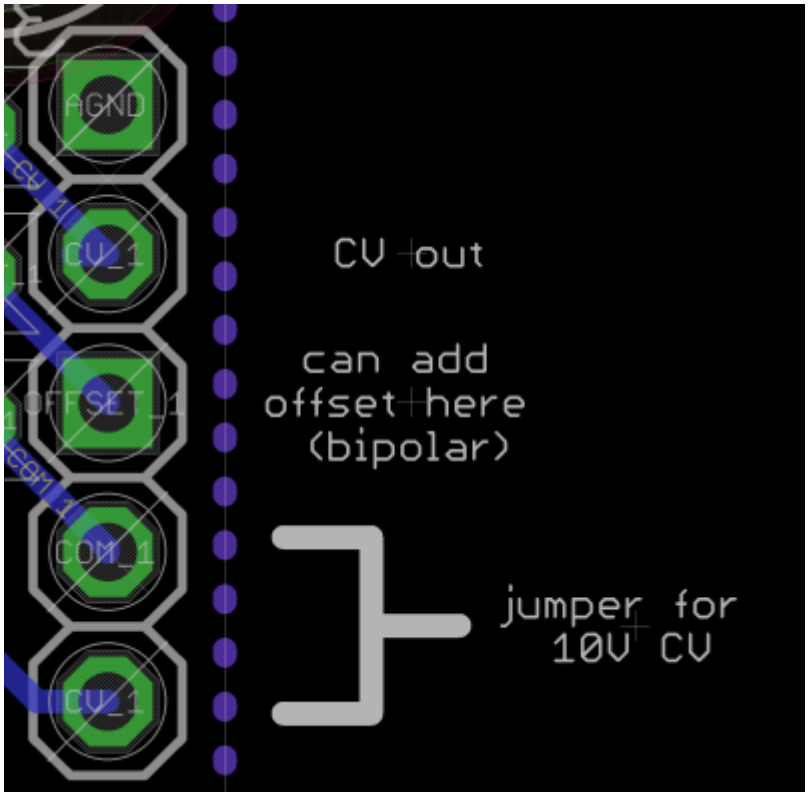

Interconnection to Core

As noted above.

License

Currently the design is © 2018 antilog devices with all rights reserved; all documentation is CC BY-NC-SA 3.0.

From:
https://www.midibox.org/dokuwiki/ - **MIDIbox**

Permanent link:
https://www.midibox.org/dokuwiki/doku.php?id=aout_4&rev=1519684452

Last update: **2018/02/26 22:34**