# Core 4 Discoveryboard STM32F407VGT6

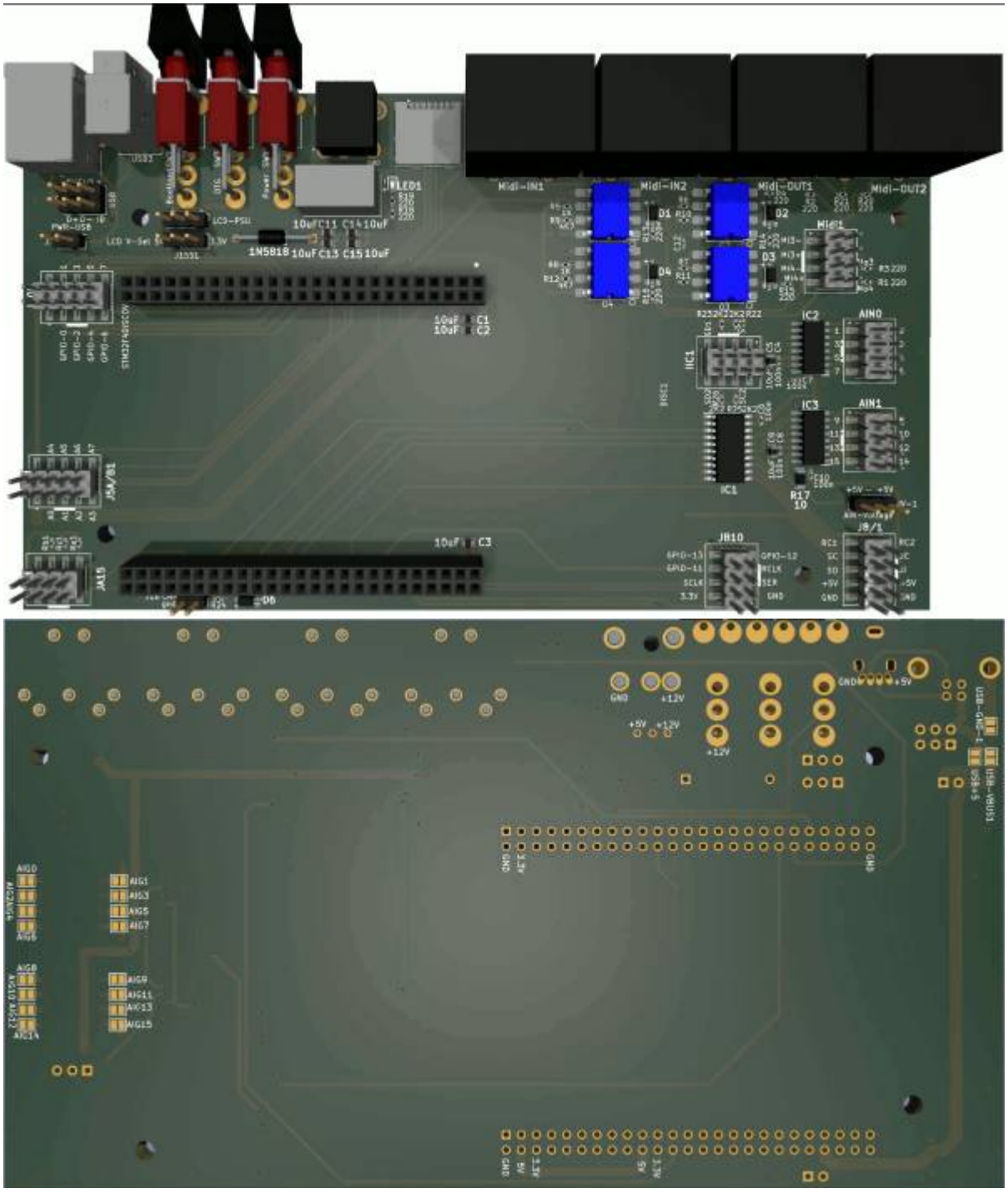


this is one essential part for my triggermatrix5
i need a core pcb which is aviable in Europe, and uses the stm32F407VGT6 chip, which has 1MB ram...

# Shematic

core4disc-shematic.pdf

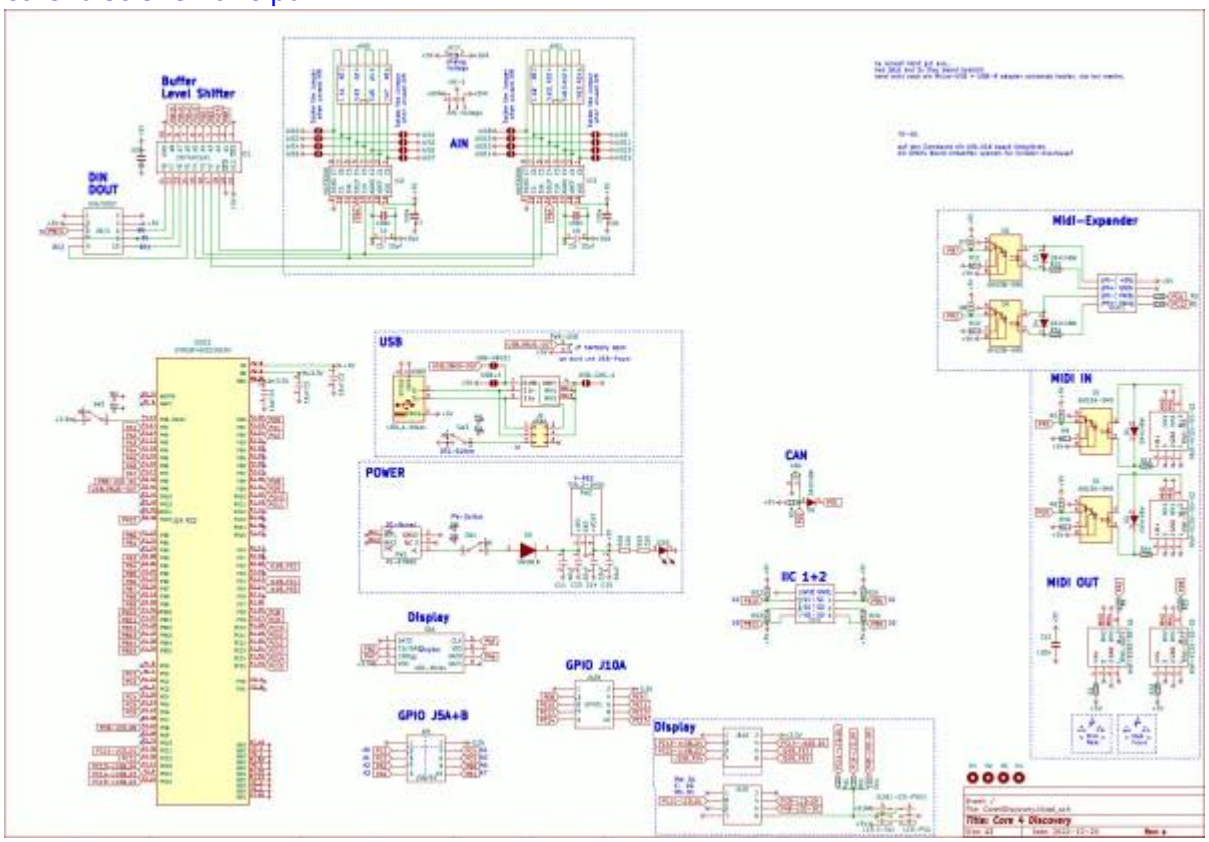


# Building and BOM

parts off it is pick and place the other part is handsolder

## BOM

the LCSC Parts are done with the Pick and place - so no need to order...

| Comment | Designator | LCSC | Lot |
|---|---|---|---|
| SN74HC541 | IC1 | C116811 | 1 |
| 1K | Ra1,Rb1,Rc1,R5,R6,R7,R8,R24 | C11702 | 8 |
| J10B | GPIO1 | C124391 | 1 |
| AIN | J5A/B1 | C124391 | 1 |
| DIN/DOUT | J8/1 | C124391 | 1 |
| MCP3208 | IC2,IC3 | C16939 | 2 |
| 10 | R17 | C17902 | 1 |
| 6N138-SMD | O1,O2,O3,O4 | C188666 | 4 |
| Pin-Header-2×4-SMD | AIN0,AIN1 | C192300 | 2 |

| Comment | Designator | LCSC | Lot |
|---|---|---|---|
| J4A+B | IIC1 | C192300 | 1 |
| J15A | JA15 | C192300 | 1 |
| J10B | JB10 | C192300 | 1 |
| - | Midi1 | C192300 | 1 |
| LED | LED1 | C2286 | 1 |
| 220 | R1-4,R13-21 | C25091 | 12 |
| 2K2 | R22,R23,R25,R26 | C25879 | 4 |
| 4K7 | R9,R10,R11,R12 | C25900 | 4 |
| 100n | C4,C6,C7,C8,C10,C12 | C307331 | 6 |
| 10uF | C1-5,C9,C11,C13-15 | C440198 | 9 |
| uSD-Molex | SD1 | C585350 | 1 |
| 1N4148W | D1,D2,D3,D4,D6 | C81598 | 5 |

The Mouser parts that have to be soldered by hand - you have to order them on your own...:

| Comment | Designator | MouserNumber | Lot |
|---|---|---|---|
| PW2 | TSR_2-2450 | 495-TSR2-2450 | 1 |
| USB1 | USB-B-Socket | 538-67068-8000 | 1 |
| D5 | 1N5818 | 583-1N5818-T | 1 |
| Midi1 | - | 649-1012938390801ALF | 1 |
| Midi-IN1-2, Midi-OUT1-2 | Midi-KCDX-5S-S2 | 806-KCDX-5S-S2 | 4 |
| DISC1 | STM32F4DISCOVERY | 511-STM32F407G-DISC1 | 1 |
| PW1 | PJ-079BH | 490-PJ-079BH | 1 |
| SW1-3 | Power | 611-1101M2S4AV2BE2 | 3 |
| USB3 | USB_A-Molex | 538-89485-8000 | 1 |

# Order-List

copy following list into this mouser.com-Link

```
495-TSR2-2450|1
538-67068-8000|1
583-1N5818-T|1
649-1012938390801ALF|1
806-KCDX-5S-S2|4
511-STM32F407G-DISC1|1
490-PJ-079BH|1
611-1101M2S4AV2BE2|3
538-89485-8000|1
```

**Order from Reichelt:**
2x 2x25Pin Female 2,54mm Headers
1x 1x20Pin Male 2,54mm Headers
1x 2x10Pin Male 2,54mm Headers

5x PinHeader 2x5Pin FeMale
4x PinHeader 2x4Pin Female

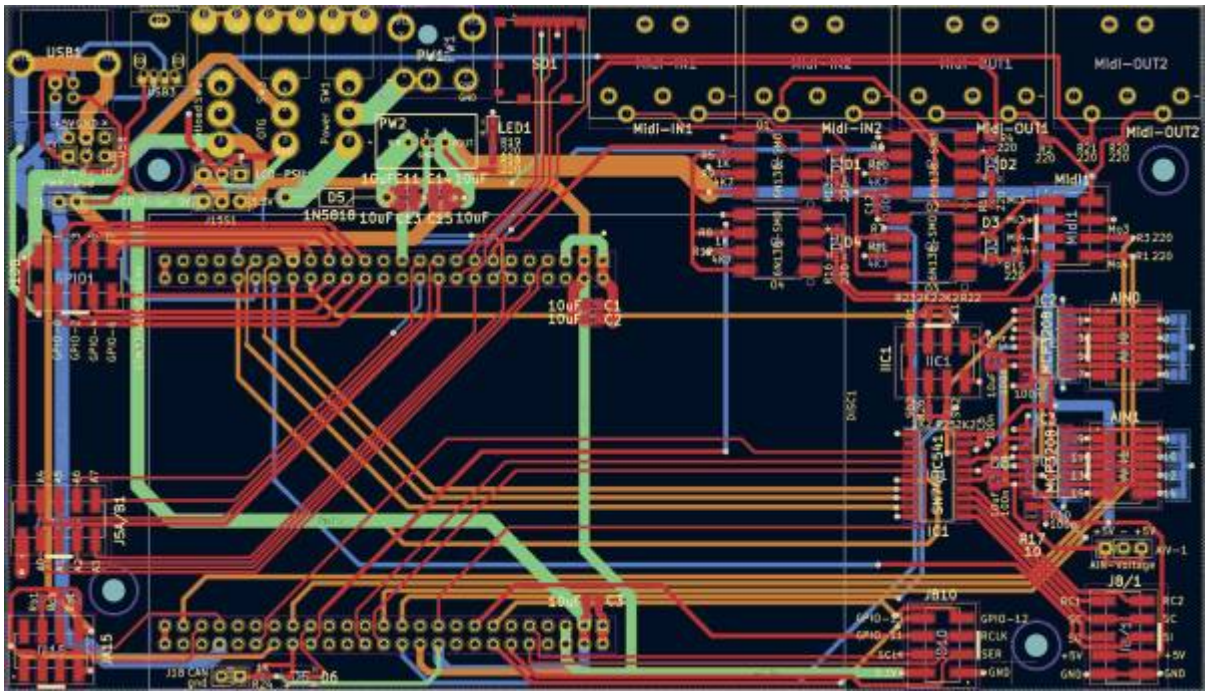


# To Do

waiting for the assembled Prototype

# Community users working on it

- **Phatline** = PCB & Shematic, UI-Programming, Documentation...

Just let a Private message on the forum to user already involved.
or join the forum: Triggermatrix 5

From:
https://www.midibox.org/dokuwiki/ - **MIDIbox**

Permanent link:
**https://www.midibox.org/dokuwiki/doku.php?id=core4disc&rev=1672315532**

Last update: **2022/12/29 12:05**