Core 4 Discoveryboard STM32F407VGT6

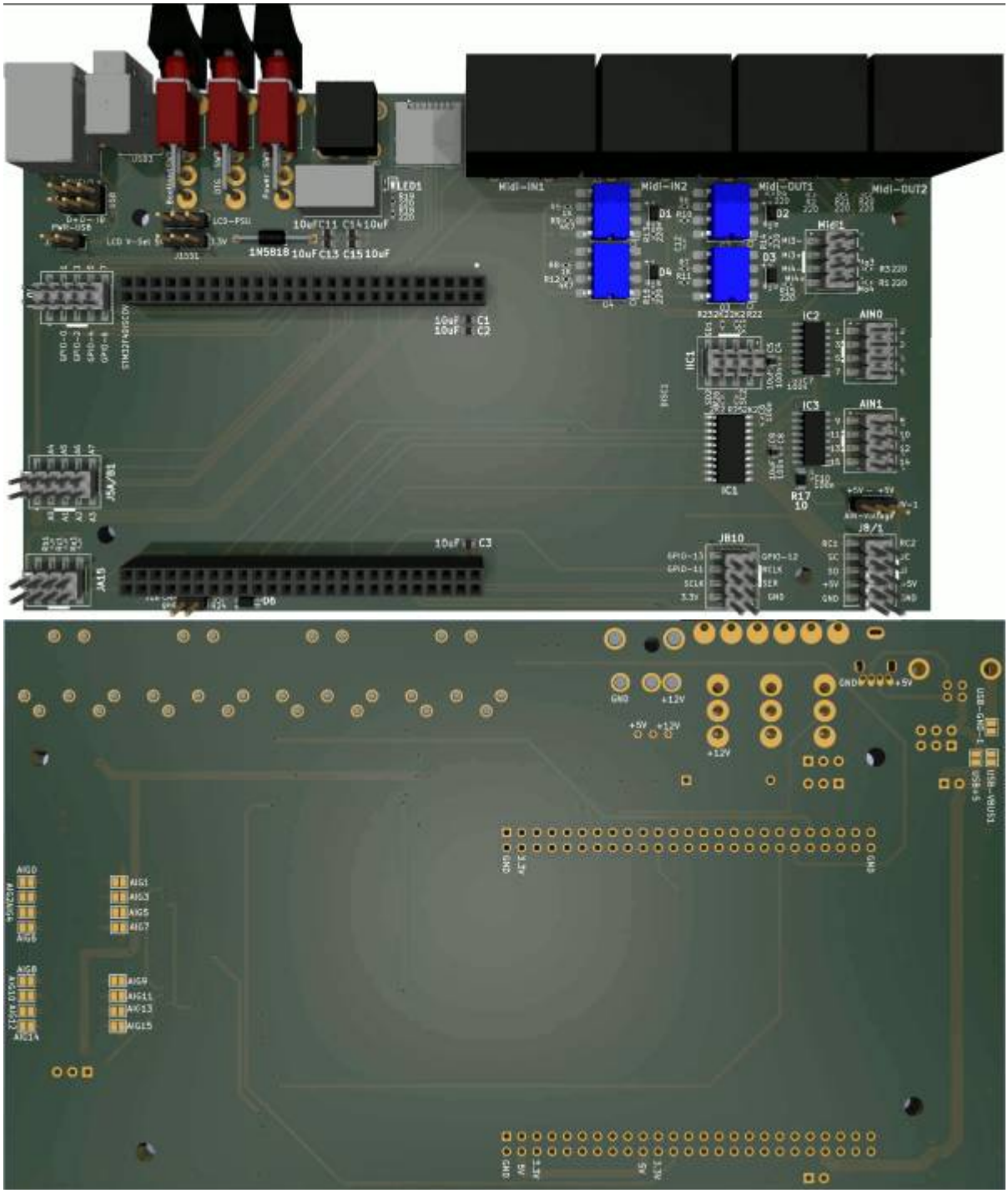

this is one essential part for my triggermatrix5
i need a core pcb which is aviable in Europe, and uses the stm32F407VGT6 chip, which has 1MB ram...

Shematic

core4disc-shematic.pdf

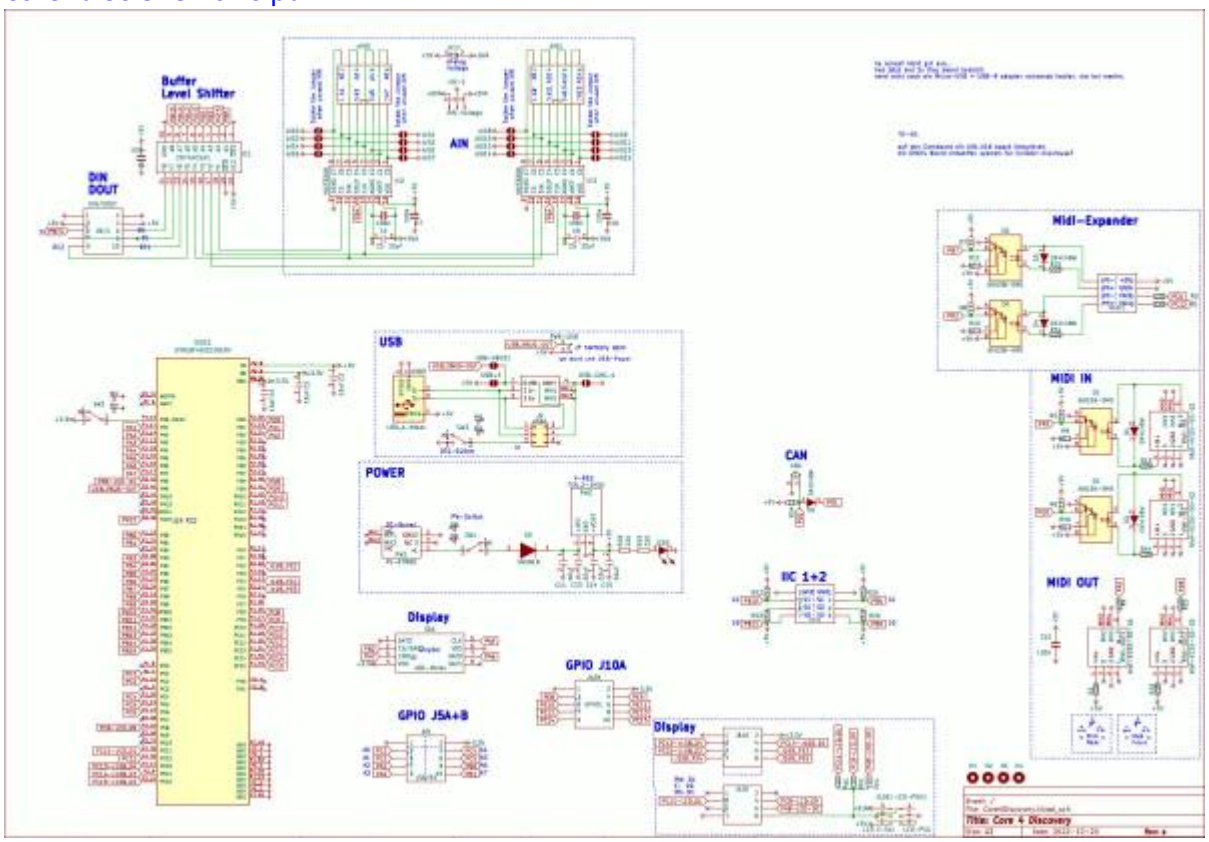

Building and BOM

parts off it is pick and place the other part is handsolder

BOM

the LCSC Parts are done with the Pick and place - so no need to order...

Comment	Designator	LCSC	Lot
SN74HC541	IC1	C116811	1
1K	Ra1,Rb1,Rc1,R5,R6,R7,R8,R24	C11702	8
J10B	GPIO1	C124391	1
AIN	J5A/B1	C124391	1
DIN/DOUT	J8/1	C124391	1
MCP3208	IC2,IC3	C16939	2
10	R17	C17902	1
6N138-SMD	O1,O2,O3,O4	C188666	4
Pin-Header-2×4-SMD	AIN0,AIN1	C192300	2

Comment	Designator	LCSC	Lot
J4A+B	IIC1	C192300	1
J15A	JA15	C192300	1
J10B	JB10	C192300	1
-	Midi1	C192300	1
LED	LED1	C2286	1
220	R1-4,R13-21	C25091	12
2K2	R22,R23,R25,R26	C25879	4
4K7	R9,R10,R11,R12	C25900	4
100n	C4,C6,C7,C8,C10,C12	C307331	6
10uF	C1-5,C9,C11,C13-15	C440198	9
uSD-Molex	SD1	C585350	1
1N4148W	D1,D2,D3,D4,D6	C81598	5

The Mouser parts that have to be soldered by hand - you have to order them on your own...:

Comment	Designator	MouserNumber	Lot
PW2	TSR_2-2450	495-TSR2-2450	1
USB1	USB-B-Socket	538-67068-8000	1
D5	1N5818	583-1N5818-T	1
Midi1	-	649-1012938390801ALF	1
Midi-IN1-2, Midi-OUT1-2	Midi-KCDX-5S-S2	806-KCDX-5S-S2	4
DISC1	STM32F4DISCOVERY	511-STM32F407G-DISC1	1
PW1	PJ-079BH	490-PJ-079BH	1
SW1-3	Power	611-1101M2S4AV2BE2	3
USB3	USB_A-Molex	538-89485-8000	1

Order-List

copy following list into this mouser.com-Link

```
495-TSR2-2450|1
538-67068-8000|1
583-1N5818-T|1
649-1012938390801ALF|1
806-KCDX-5S-S2|4
511-STM32F407G-DISC1|1
490-PJ-079BH|1
611-1101M2S4AV2BE2|3
538-89485-8000|1
```

Order from Reichelt:
2x 2x25Pin Female 2,54mm Heades
1x 1x20Pin Male 2,54mm Header
1x 2x10Pin Male 2,54mm Header

5x 2x5Pin 2,54mm FeMale Header
4x 2x4Pin 2,54mm Female Header

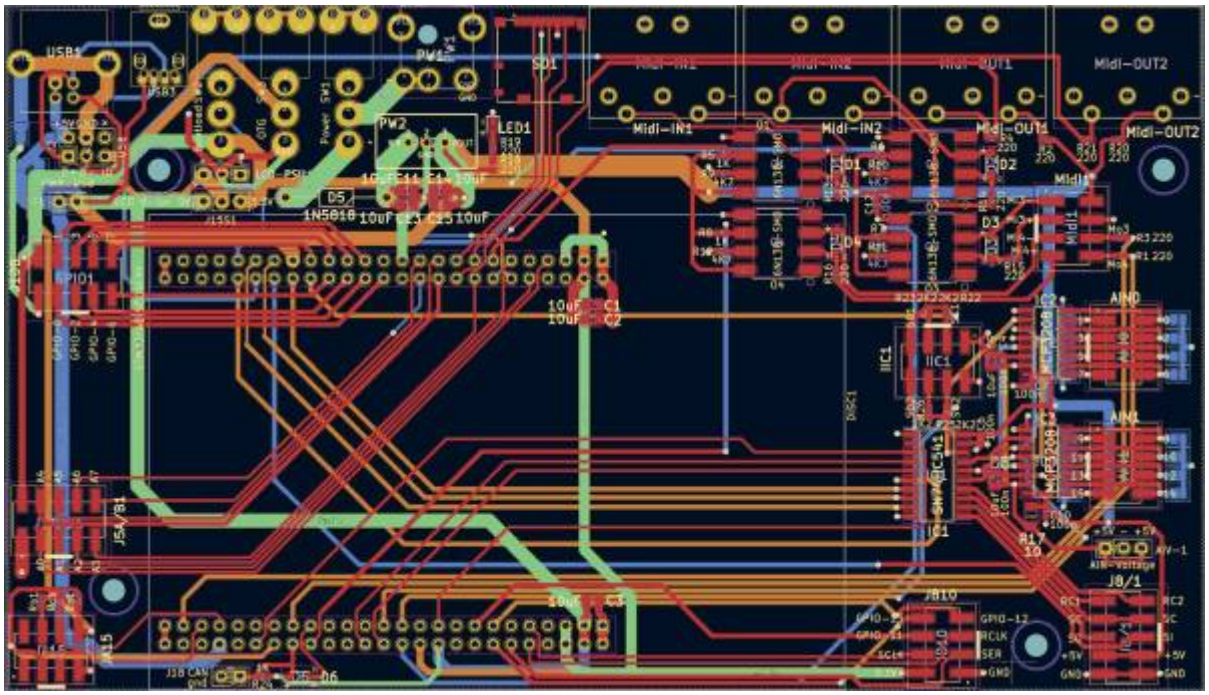

To Do

waiting for the assembled Prototype

Community users working on it

- **Phatline** = PCB & Shematic, UI-Programming, Documentation...

Just let a Private message on the forum to user already involved.
or join the forum: Triggermatrix 5

From:
https://www.midibox.org/dokuwiki/ - **MIDIbox**

Permanent link:
https://www.midibox.org/dokuwiki/doku.php?id=core4disc&rev=1672316159

Last update: **2022/12/29 12:15**