# Core4Disc Midi-Expansion

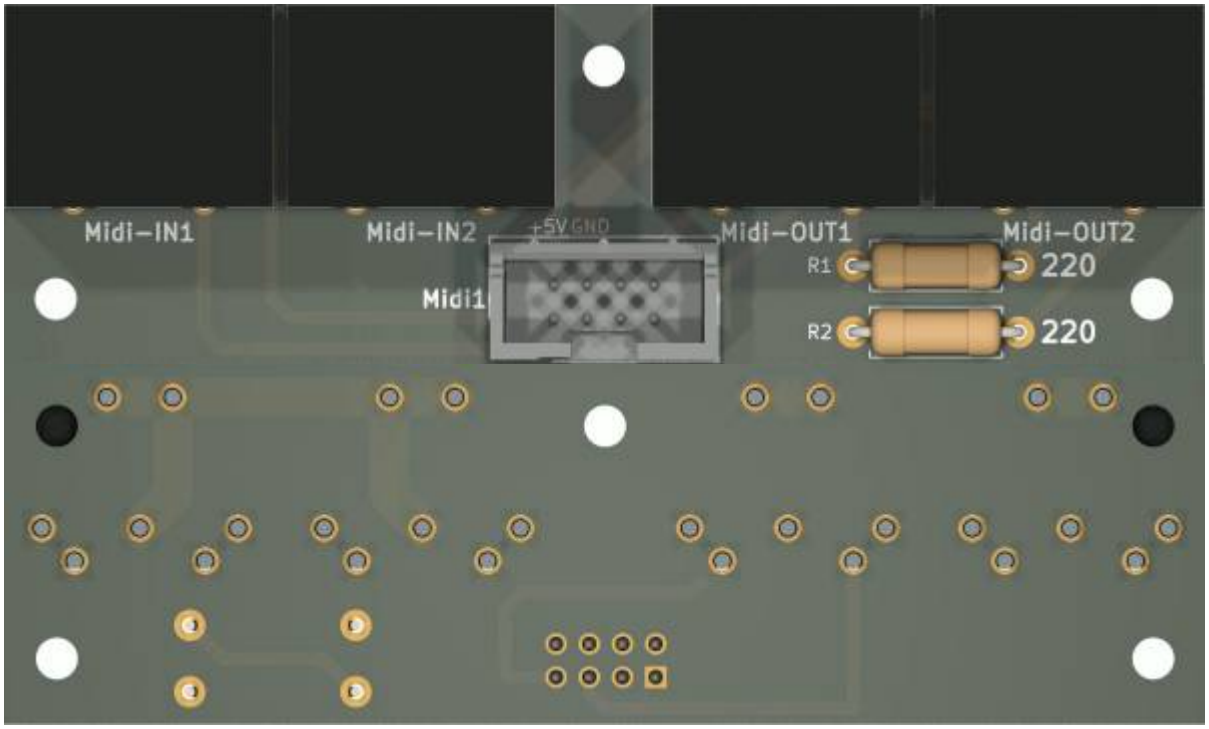


this is one essential part for my triggermatrix5

# Shematic

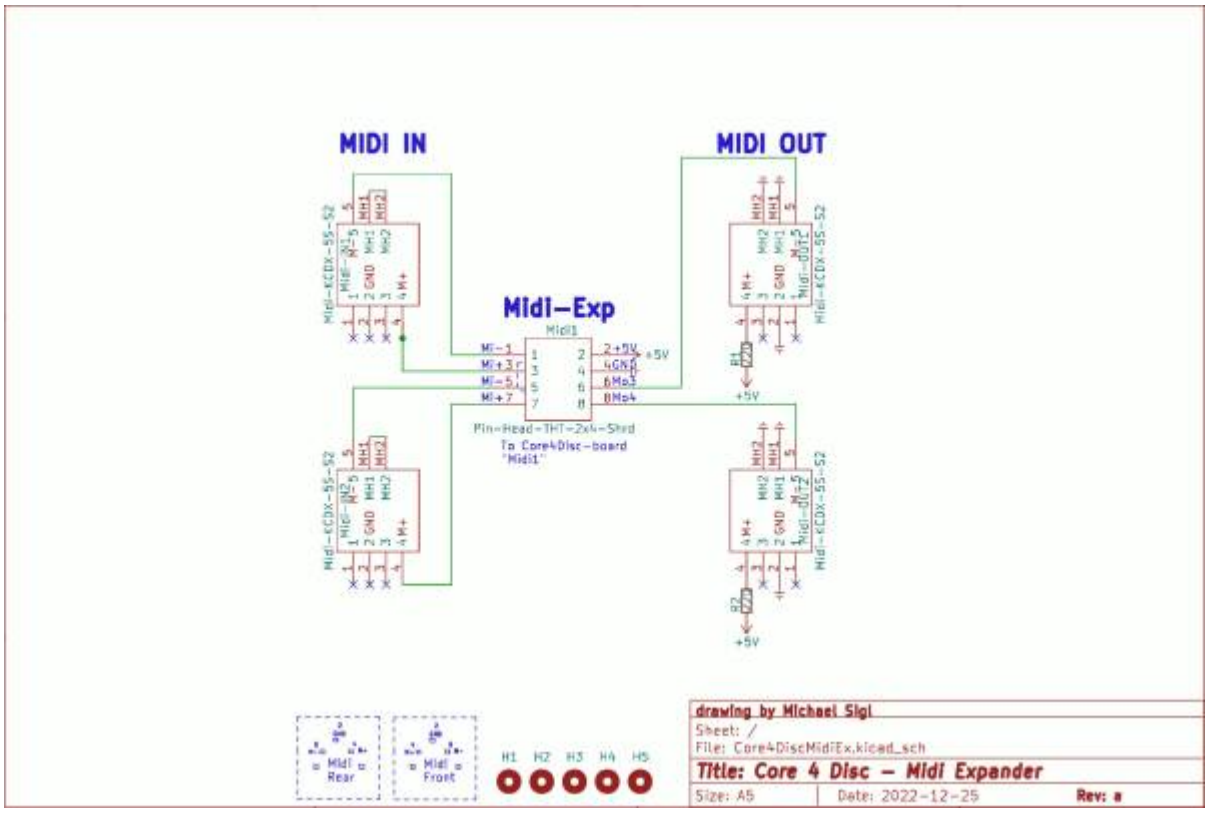

# Building and BOM

Handsolder, easy project...

## BOM

^Qty ^Reference(s) ^Value ^Footprint ^Mouser^

| | | | | |
|---|---|---|---|---|
| 1 | Midi1 | Pin-Head-2×4 | PinHead-Shrd-2×4-THT | 649-75869-232LF |
| 4 | Midi-IN1-2, Midi-OUT1-2 | Din 5Pole | KCDX5SS2 | 806-KCDX-5S-S2 |
| 2 | R1, R2 | 220 | THT or 1206 | SMD: 660-RK73B2BTTD221J THT: 281-220-RC |

R1 and R2 can be solderd as Thruhole, or SMD1206 Package

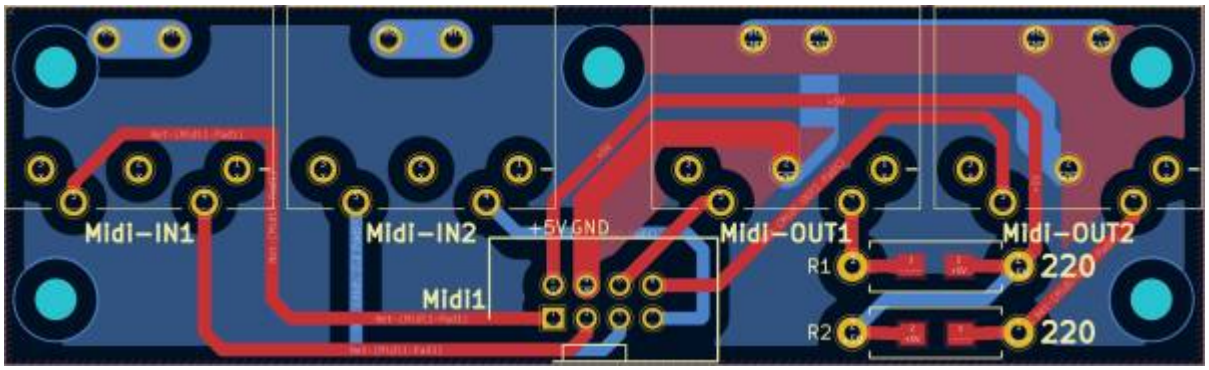


# To Do

waiting for Prototype PCB

# Community users working on it

- **Phatline** = PCB & Shematic, UI-Programming, Documentation...

Just let a Private message on the forum to user already involved.
or join the forum: Triggermatrix 5

From:
https://www.midibox.org/dokuwiki/ - **MIDIbox**

Permanent link:
**https://www.midibox.org/dokuwiki/doku.php?id=core4discmidiex&rev=1671987291**

Last update: **2022/12/25 16:54**