DAW-Encoder-Display - Board

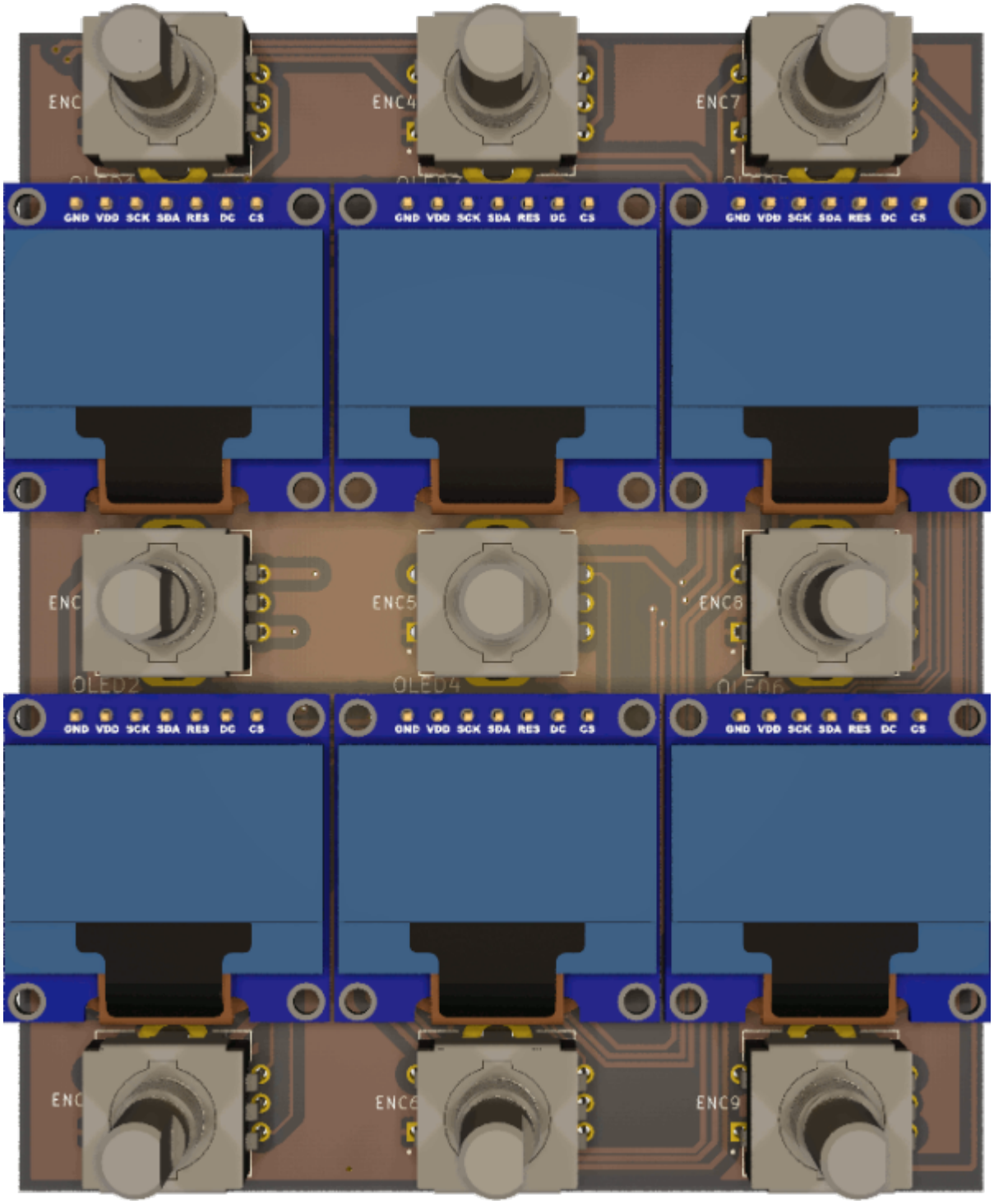

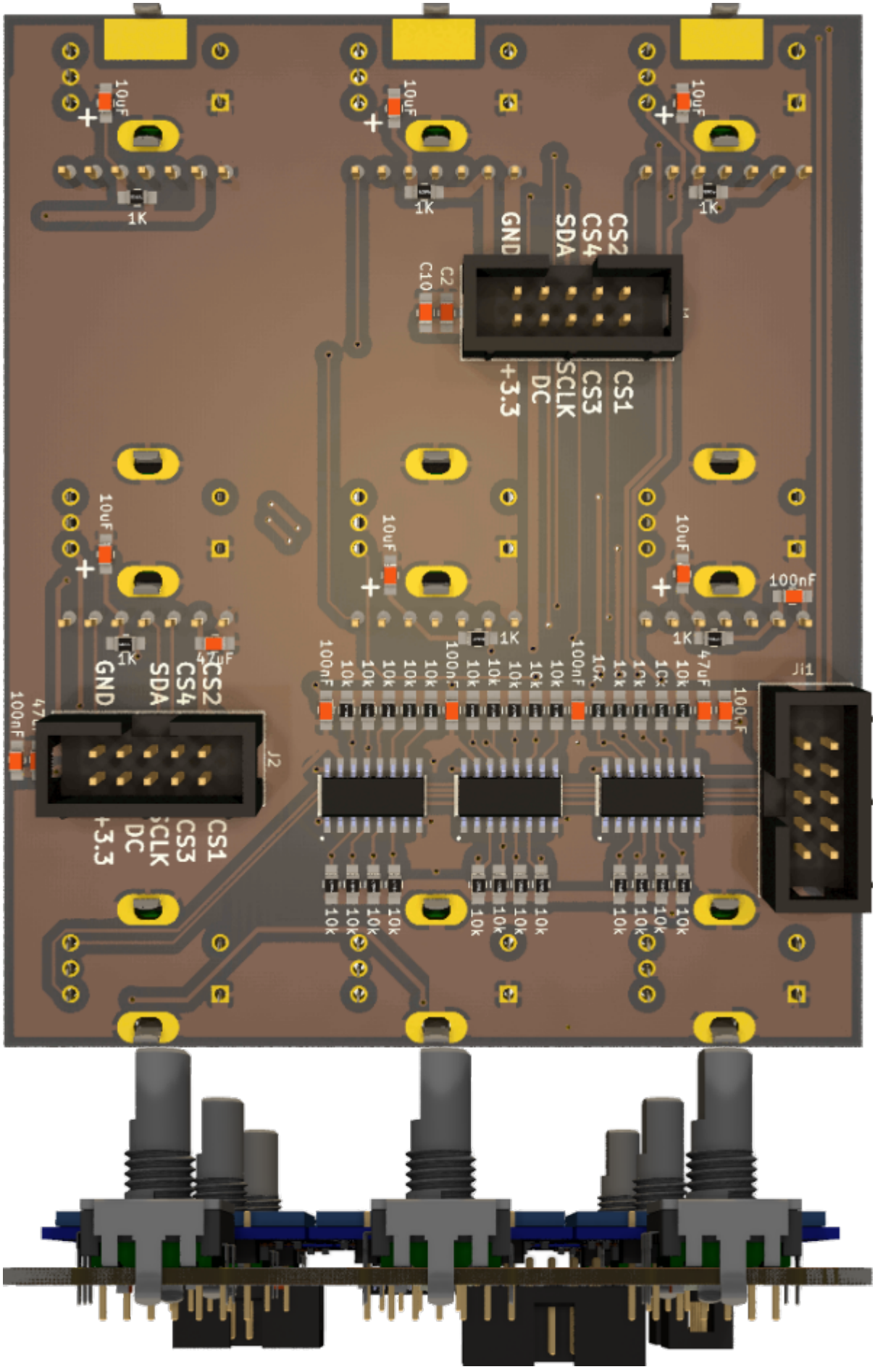

I made this PCBs to use it with Latigid-Ons display_driver

It is one part to build a DAW-controller, it can be used multiple times

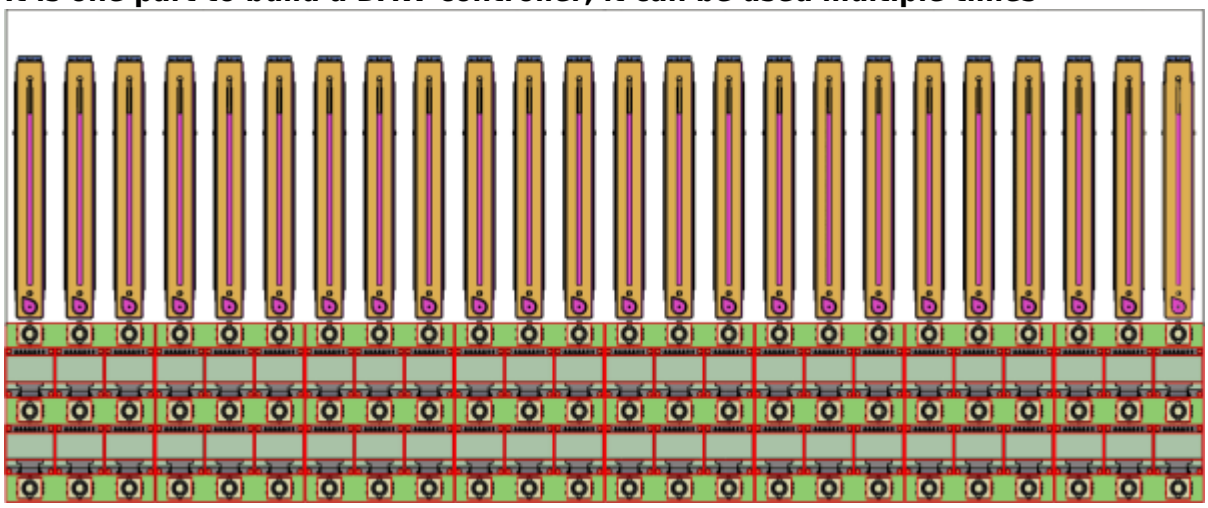

Here are the gerberfiles for production - i made it withJLCPCB
daw-encoder-display-gerber.zip

They are not testet at the moment, i am waiting for the PCBs...

Shematic

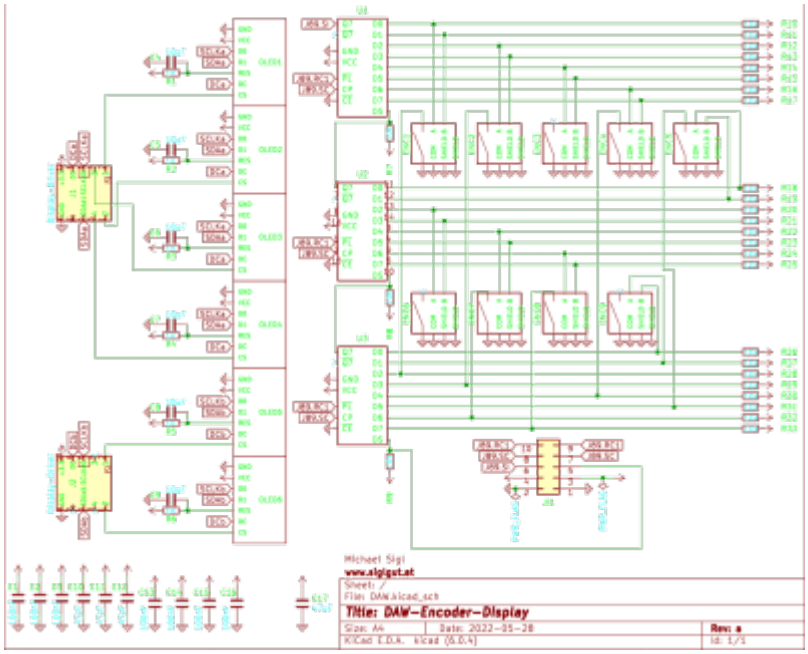

Building and BOM

The Values are printet on the PCB.

Following Quantity is for 1 PCB:
8x 1Row 7Pin headers (2.54mm pitch)
8x 1K 1208 SMD Resistors

12x 10uF 1208 Capacitors (non polarized)
3x 10K 0603 SMD Resistors which are optional

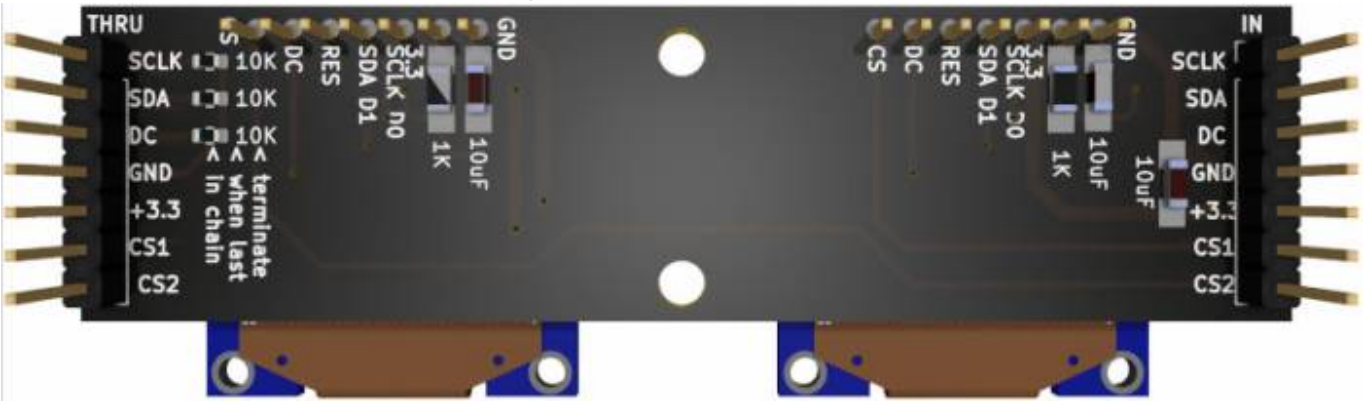

6x 0.96“ SSD1306 Screens

To Do

Waiting for the PCBs, Test them, make a Frontpanel.

Community users working on it

- **Phatline** = PCB & Shematic, UI-Programming, Documentation...

Just let a Private message on the forum to user already involved.

From:
https://www.midibox.org/dokuwiki/ - **MIDIbox**

Permanent link:
https://www.midibox.org/dokuwiki/doku.php?id=daw-encoder-display&rev=1653753477

Last update: **2022/05/28 15:57**