DAW-Encoder-Display - Board

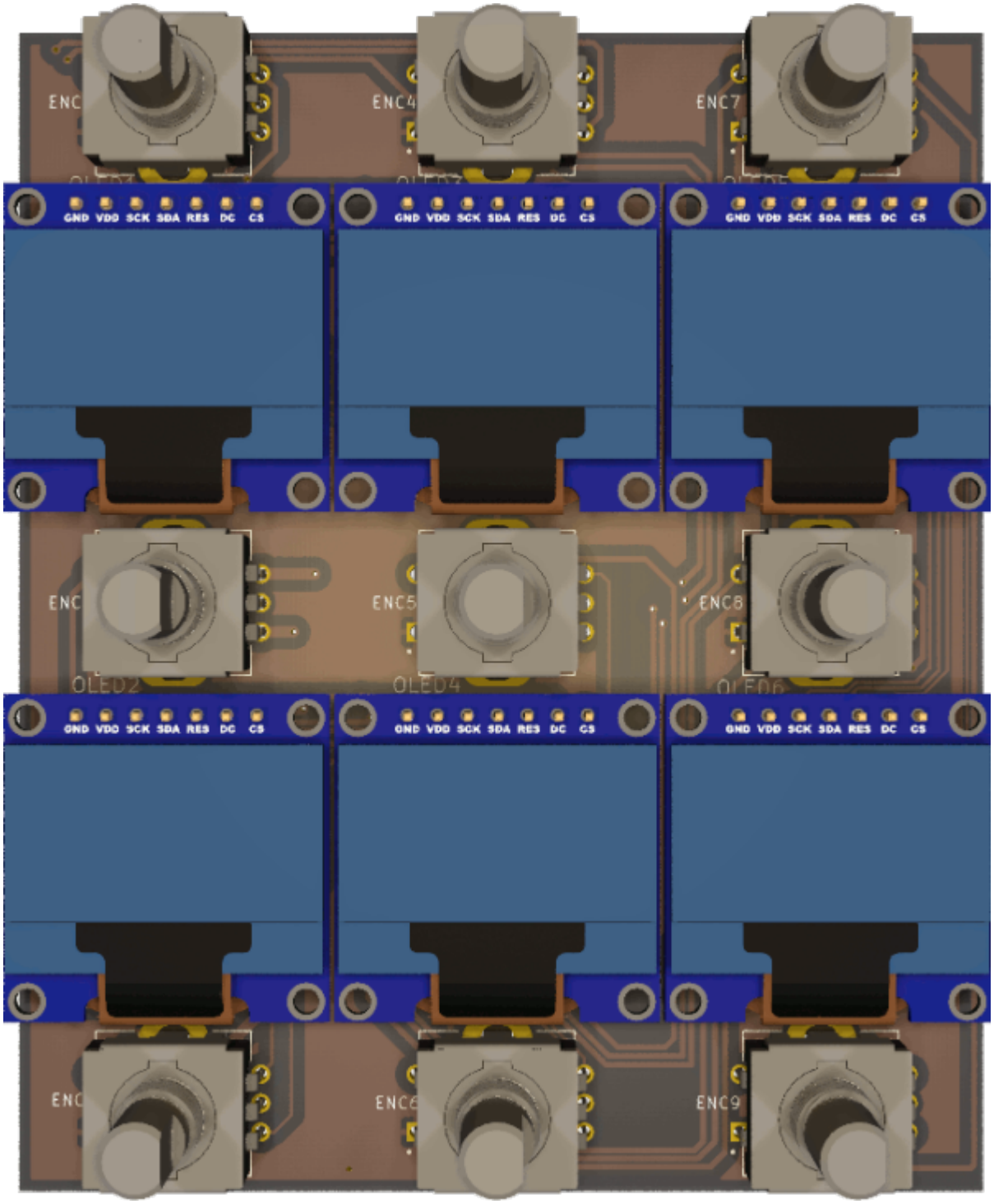

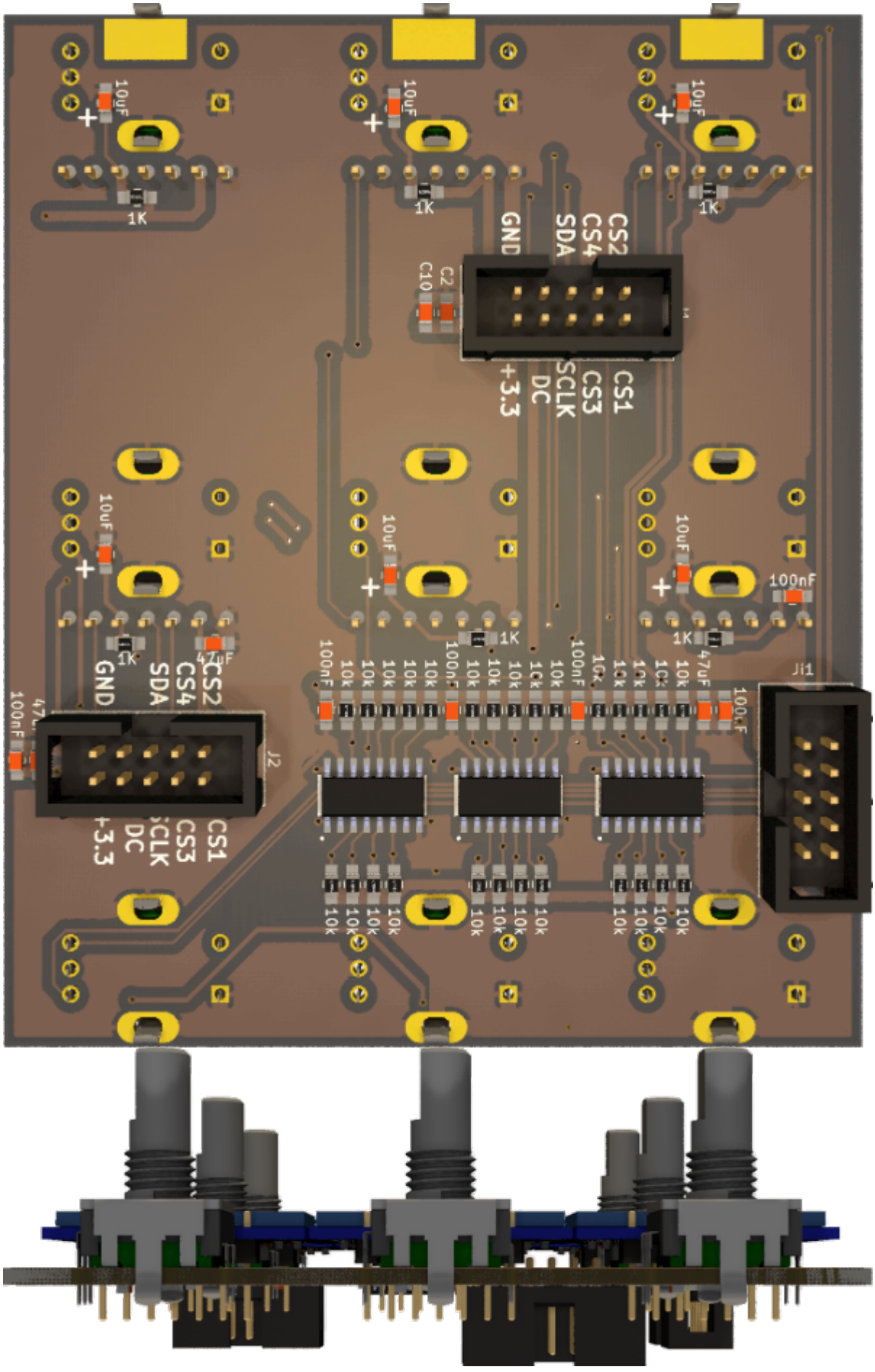

I made this PCBs to use it with Latigid-Ons display_driver

It is one part to build a DAW-controller, it can be used multiple times

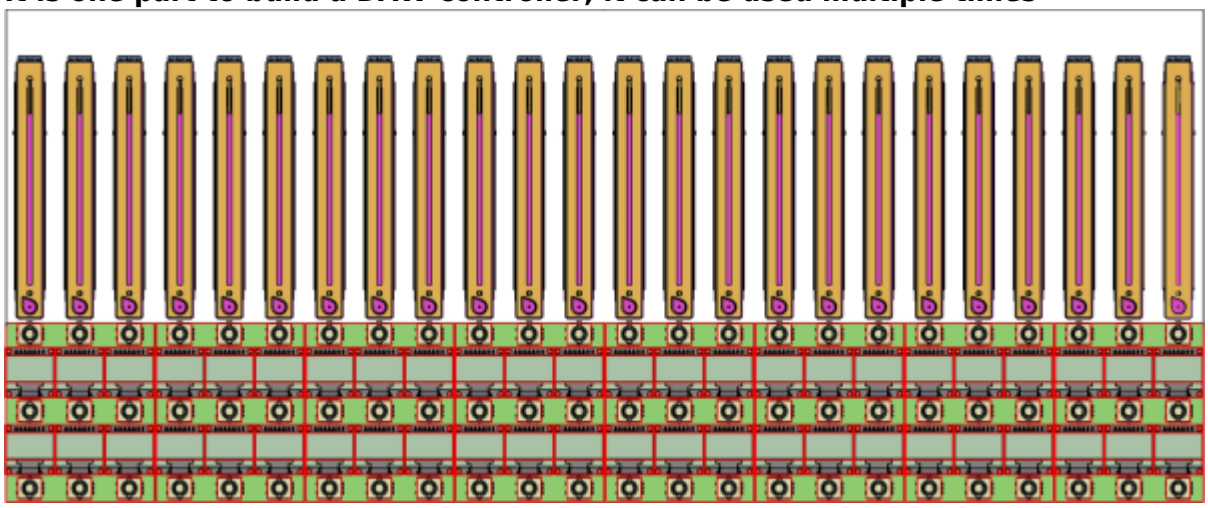

Here are the gerberfiles for production - i made it withJLCPCB
daw-encoder-display-gerber.zip

They are not testet at the moment, i am waiting for the PCBs...

Shematic

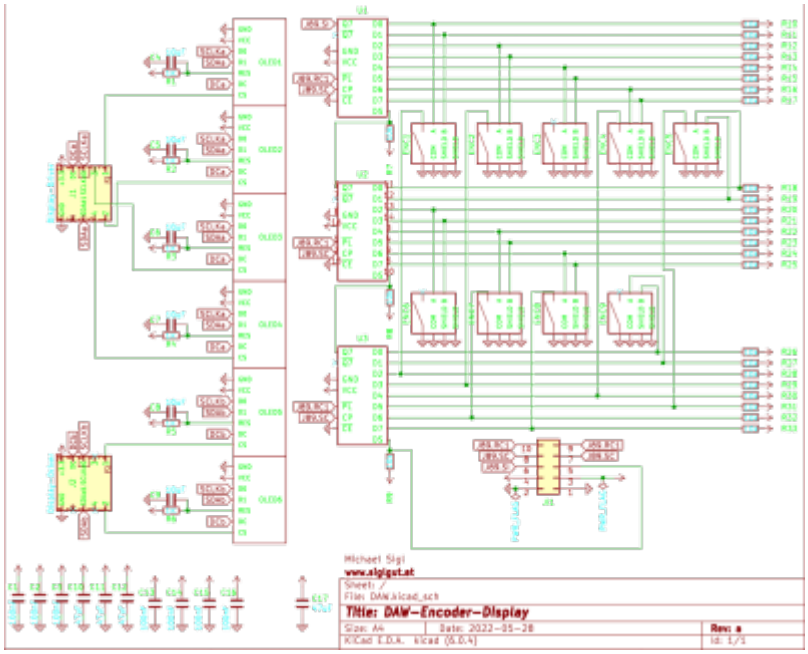

Building and BOM

The Values are printet on the PCB.

Following Quantity is for 1 PCB, Mouser:
open following link: https://www.mouser.com/tools/part-list-import.aspx

& copy past follwong list:

187-CL21B104KBFWPJE|7 187-CL21A106KPFNNNE|4 81-GRM219R60J476ME4D|4 652-PEC11R-4015F-S24|9 710-61201021621|3 667-ERJ-P06F1001V|6 660-RK73H2ATTD1002F|27 660-RK73H2ATTD1002F|3 You may change the how many times you want to order this project aka you need it 10 times, then do this after importing the list into mouser...

you also need **6 Displays (SSD1306-128×64 7pin White)** which you get from Ali:
6* SSD1306-128×64 7pin White

To Do

Waiting for the PCBs, Test them, make a Frontpanel.

Community users working on it

- **Phatline** = PCB & Shematic, UI-Programming, Documentation...

Just let a Private message on the forum to user already involved.

From:
https://www.midibox.org/dokuwiki/ - **MIDIbox**

Permanent link:
https://www.midibox.org/dokuwiki/doku.php?id=daw-encoder-display&rev=1653756117

Last update: **2022/05/28 16:41**