DAW-Encoder-Display - Board

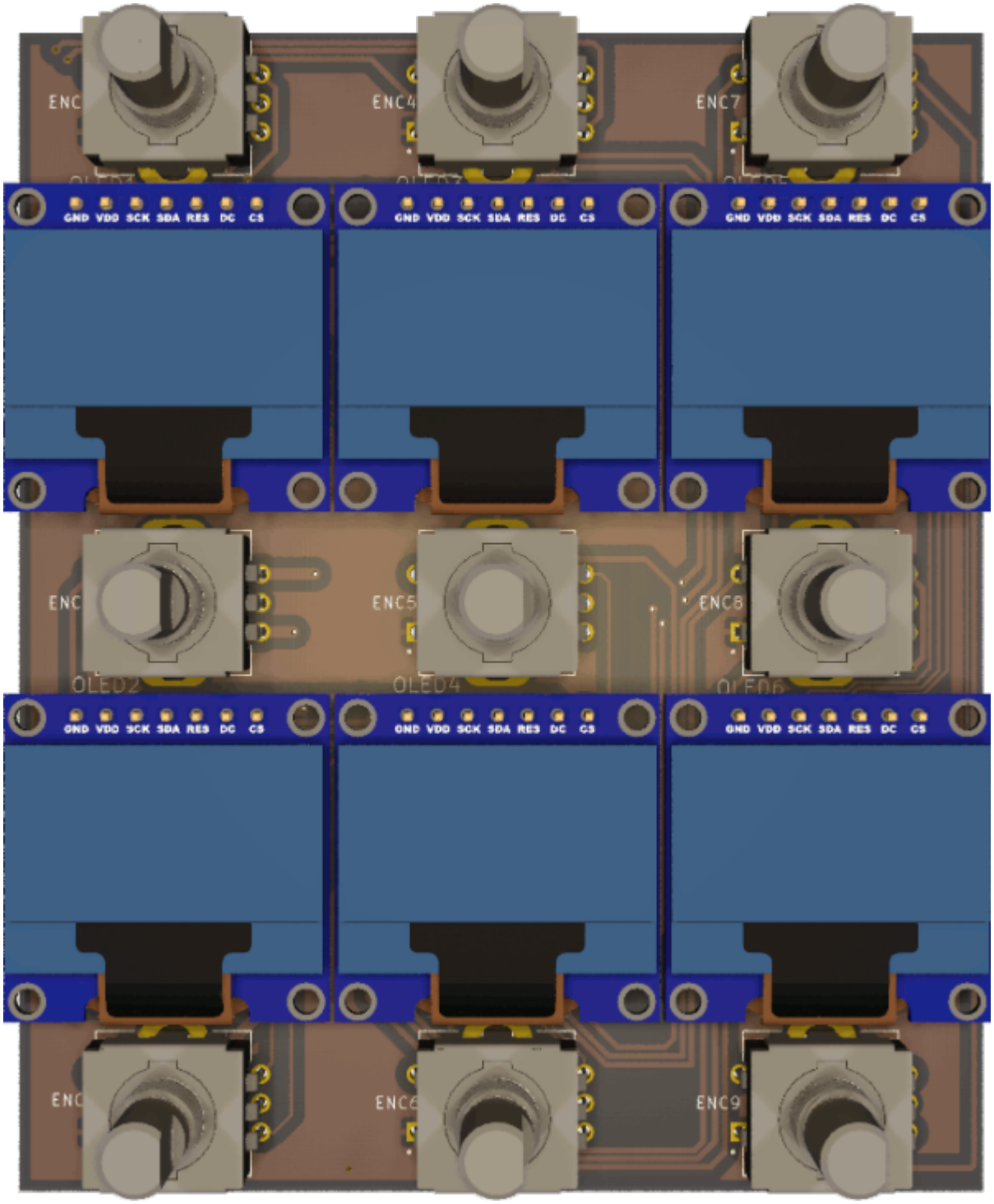

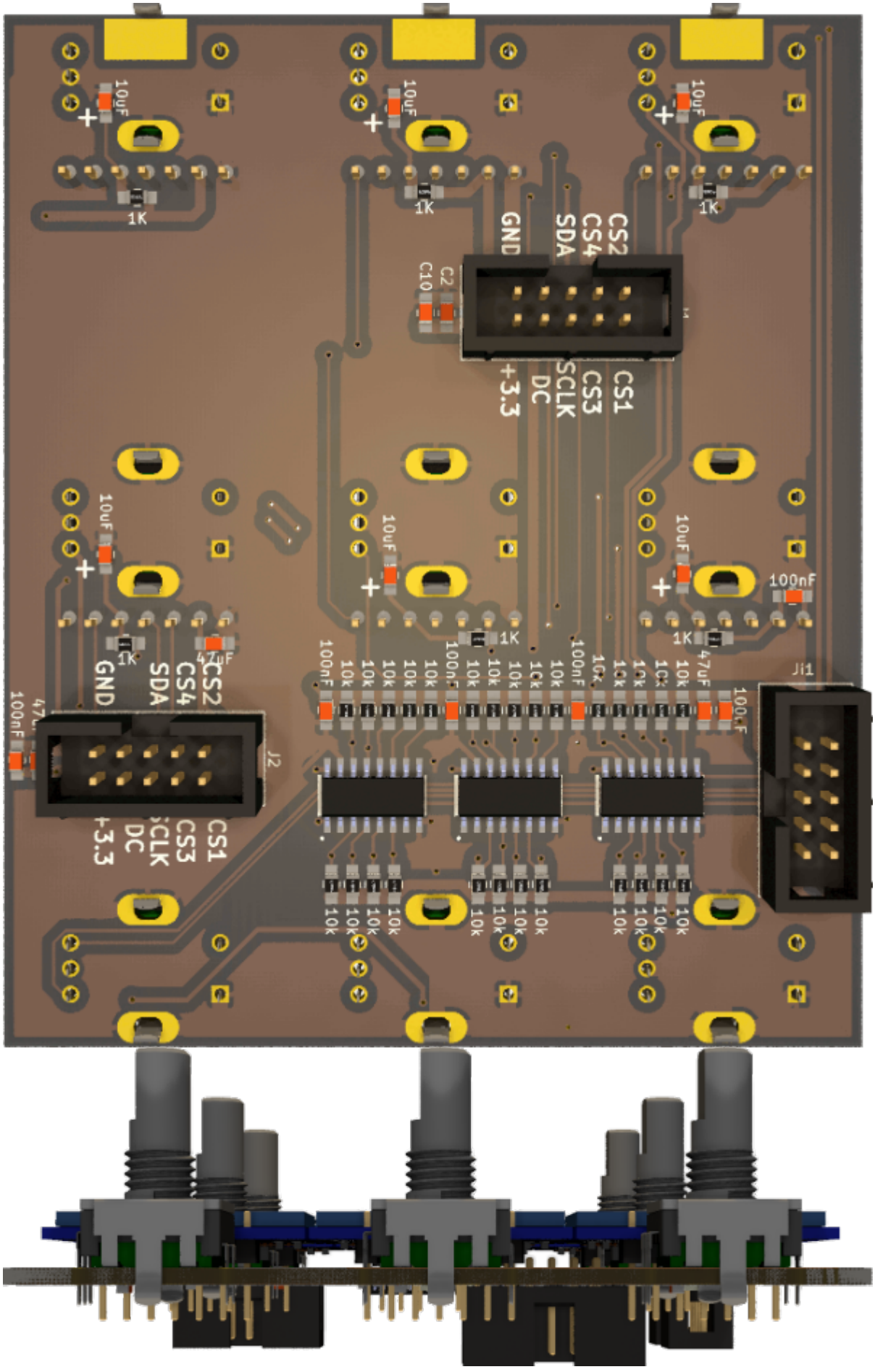

I made this PCBs to use it with Latigid-Ons display_driver

It is one part to build a DAW-controller, it can be used multiple times

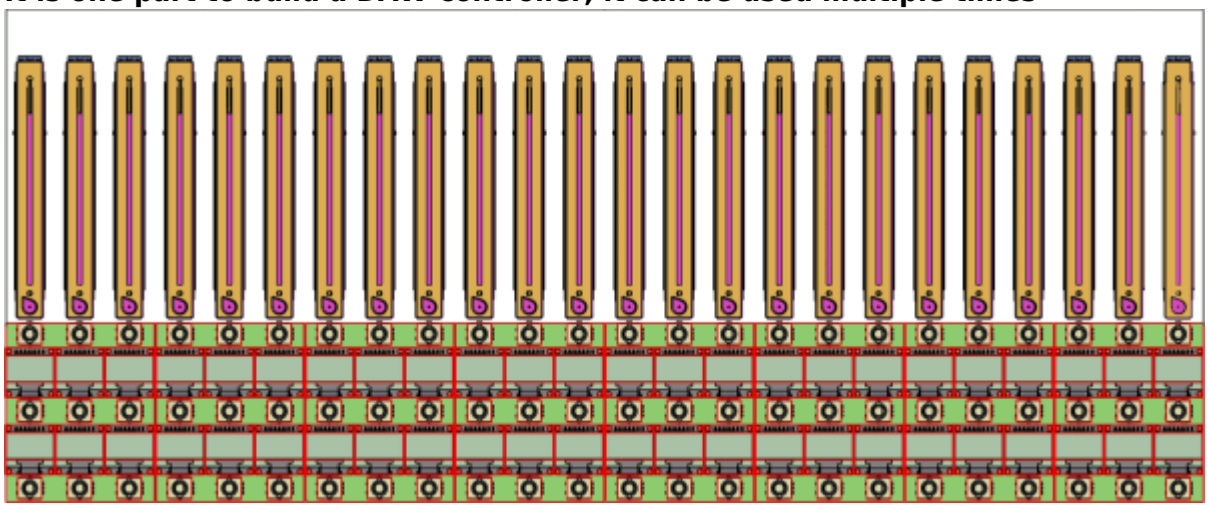

Here are the gerberfiles for production - i made it withJLCPCB
daw-encoder-display-gerber.zip
testet - working fine!

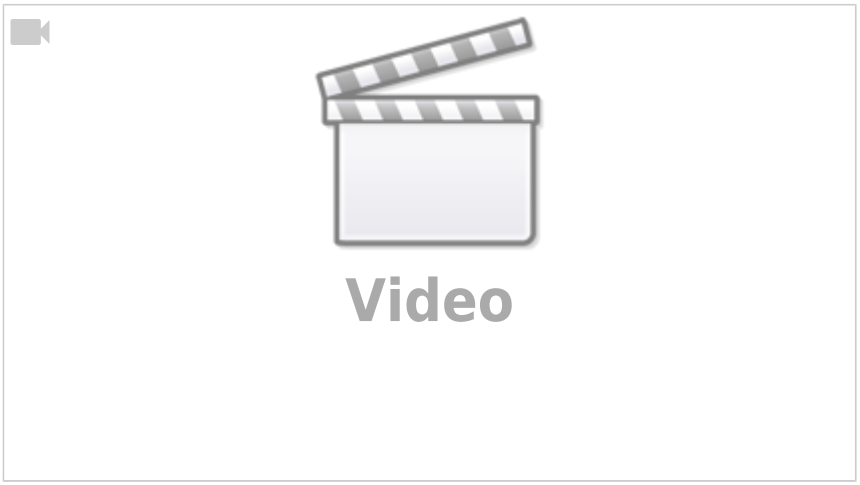

Shematic

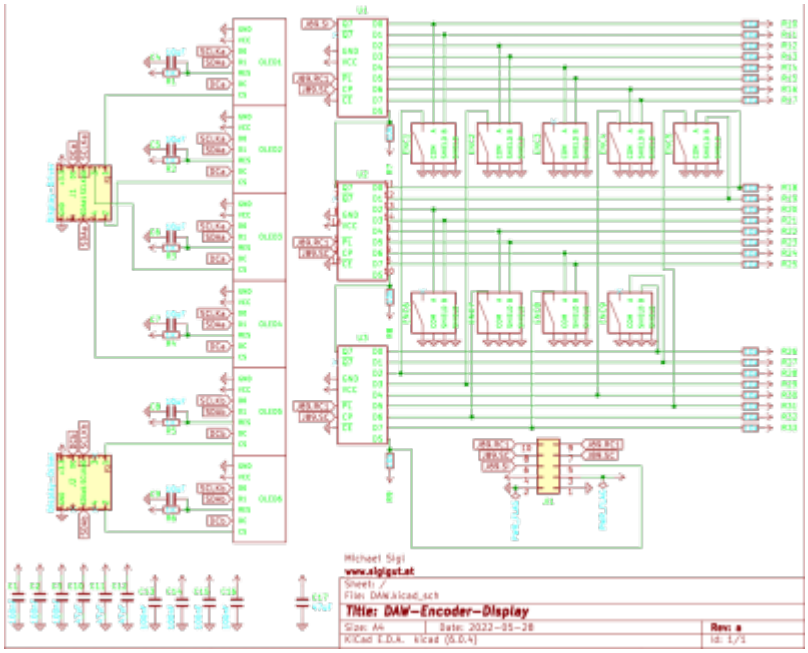

Building and BOM

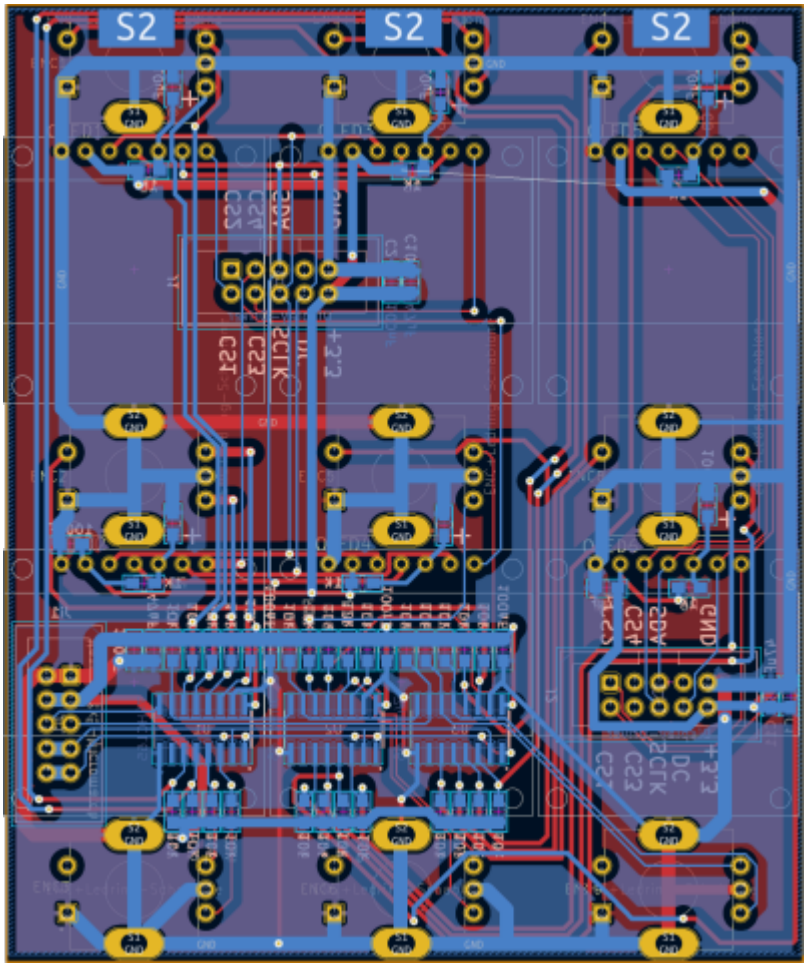

The Values are printet on the PCB.

Following Quantity is for 1 PCB, Mouser:
open following link: https://www.mouser.com/tools/part-list-import.aspx

& copy past follwong list:

187-CL21B104KBFWPJE|7
187-CL21A106KPFNNNE|4
81-GRM219R60J476ME4D|4
652-PEC11R-4015F-S24|9
710-61201021621|3
667-ERJ-P06F1001V|6
660-RK73H2ATTD1002F|27
660-RK73H2ATTD1002F|3
771-74HC165D-T|3

You may change the how many times you want to order this project
aka you need it 10 times, then do this after importing the list into mouser...
if you need it 10 times it cost around 199€

6 Displays which you get from Ali:
SSD1306-128x64 7pin White

To Do

make a Frontpanel.

Community users working on it

- **Phatline** = PCB & Shematic, UI-Programming, Documentation...

Just let a Private message on the forum to user already involved.
or join the forum: daw-controller-ableton

From:
https://www.midibox.org/dokuwiki/ - **MIDIbox**

Permanent link:
https://www.midibox.org/dokuwiki/doku.php?id=daw-encoder-display&rev=1676998137

Last update: **2023/02/21 16:48**