'ELO

Illuminated encoders and OLEDs mounted at 45 degrees. Optional touch sensors.

Schematic

WS2812 LEDs are arranged in a snake pattern entering at J1 and exiting at J2. R1 should be installed as a resistor 220-470R for the first module only and as a wire link for any subsequent WS2812 modules. There are pads for RC termination, which shouldn't be required.

A DIN chain scans the encoders and touch sensors coming in on J3 and out on J4. The encoders are assigned in columns to a 165 shift register with the top position using D0/D1, the second D1/D2, etc. Note that the clear-shaft encoders have the pin directions swapped; this should be taken into account in an MB_NG file. In theory the SRIO chain could be extended from J4.

There are 16 separate touch sensor circuits as shown (circuit design adapted from Talking Electronics):

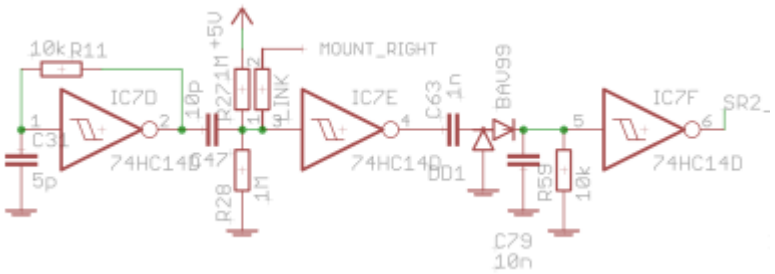

The first inverter comprises an oscillator feeding into another inverter. By touching the “LINK” part, the capacitance increases. The third inverter forms a comparator. In the normal state, the oscillator keeps the gate output low. When touched, the oscillator will “bleed” through and set the gate high. The actual part values may need adjusting to suit your own body/environment. To use plates mounted onto the encoder bodies, solder a wire link across the TS parts as noted. To use other metal pieces (e.g. an external keyboard), connect a wire to the pads adjacent to surface-mount parts.

- If touch sensors are not required, pins 9/10 of IC2 and IC5 can be bridged and the 165 chips/resistor networks omitted (this will obviously change the addressing of encoders!).
- If the 165 chips are installed but no touch sensors are used, then the resistor networks must also be installed.
- If touch sensors are used, then RN2/5 should be omitted. The inverter gates ensure a defined logic level.

The OLED displays are connected as follows:

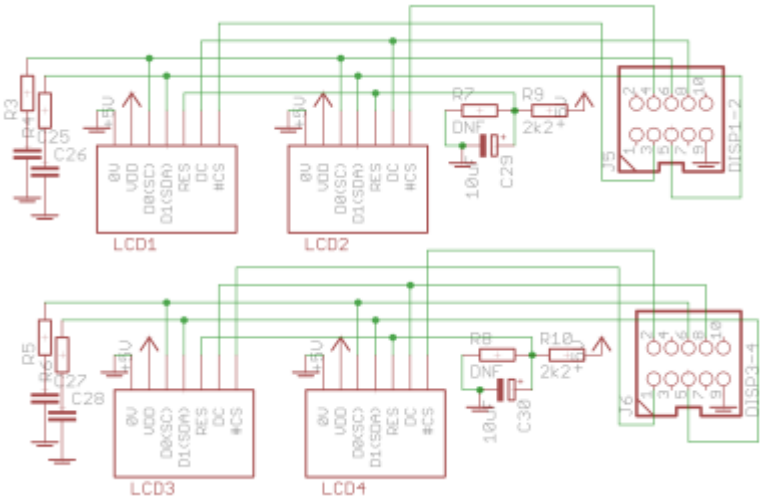

The reset circuits R9/R10/C29/C30 should be installed. The termination circuits R3-6/C25-28 shouldn't be required. When wiring ribbon cables, the end attached to the ELO board should have two IDCs on it; there is no connection on the PCB for the clock/data etc. lines between the two pairs of displays.

+5V Power enters through J7 and D1. There is no connection to +5V on other headers, apart from J4 to potentially drive SRIO modules.

BOM v1.0

Type	Part	Value	Device
Caps	C1	10—100uF	CPOL-EU-1
	C2	100n	C1206
	C3	100n	C1206
	C4	100n	C1206
	C5	100n	C1206
	C6	100n	C1206
	C7	100n	C1206
	C8	100n	C1206
	C9	100n	C1206
	C10	100n	C1206
	C11	100n	C1206
	C12	100n	C1206
	C13	100n	C1206
	C14	100n	C1206
	C15	100n	C1206
	C16	100n	C1206
	C17	100n	C1206
	C18	DNF	
	C19	100n	C1206
	C20	100n	C1206
	C21	100n	C1206
	C22	100n	C1206
	C23	100n	C1206

Type	Part	Value	Device
	C24	100n	C1206
	C25	DNF	
	C26	DNF	
	C27	DNF	
	C28	DNF	
	C29	10uF	CPOL-EUE2.5-5
	C30	10uF	CPOL-EUE2.5-5
	C31	5p	C-EUC1206
	C32	5p	C-EUC1206
	C33	5p	C-EUC1206
	C34	5p	C-EUC1206
	C35	5p	C-EUC1206
	C36	5p	C-EUC1206
	C37	5p	C-EUC1206
	C38	5p	C-EUC1206
	C39	5p	C-EUC1206
	C40	5p	C-EUC1206
	C41	5p	C-EUC1206
	C42	5p	C-EUC1206
	C43	5p	C-EUC1206
	C44	5p	C-EUC1206
	C45	5p	C-EUC1206
	C46	5p	C-EUC1206
	C47	10p	C-EUC1206
	C48	10p	C-EUC1206
	C49	10p	C-EUC1206
	C50	10p	C-EUC1206
	C51	10p	C-EUC1206
	C52	10p	C-EUC1206
	C53	10p	C-EUC1206
	C54	10p	C-EUC1206
	C55	10p	C-EUC1206
	C56	10p	C-EUC1206
	C57	10p	C-EUC1206
	C58	10p	C-EUC1206
	C59	10p	C-EUC1206
	C60	10p	C-EUC1206
	C61	10p	C-EUC1206
	C62	10p	C-EUC1206
	C63	1n	C-EUC1206
	C64	1n	C-EUC1206
	C65	1n	C-EUC1206
	C66	1n	C-EUC1206
	C67	1n	C-EUC1206
	C68	1n	C-EUC1206

Type	Part	Value	Device
	C69	1n	C-EUC1206
	C70	1n	C-EUC1206
	C71	1n	C-EUC1206
	C72	1n	C-EUC1206
	C73	1n	C-EUC1206
	C74	1n	C-EUC1206
	C75	1n	C-EUC1206
	C76	1n	C-EUC1206
	C77	1n	C-EUC1206
	C78	1n	C-EUC1206
	C79	10n	C-EUC1206
	C80	10n	C-EUC1206
	C81	10n	C-EUC1206
	C82	10n	C-EUC1206
	C83	10n	C-EUC1206
	C84	10n	C-EUC1206
	C85	10n	C-EUC1206
	C86	10n	C-EUC1206
	C87	10n	C-EUC1206
	C88	10n	C-EUC1206
	C89	10n	C-EUC1206
	C90	10n	C-EUC1206
	C91	10n	C-EUC1206
	C92	10n	C-EUC1206
	C93	10n	C-EUC1206
	C94	10n	C-EUC1206
	C95	100n	C1206
	C96	100n	C1206
	C97	100n	C1206
	C98	100n	C1206
	C99	100n	C1206
	C100	100n	C1206
	C101	100n	C1206
	C102	100n	C1206
Diodes	D1	1N5817	1N5817-B
	DD1	BAV99	BAV99
	DD2	BAV99	BAV99
	DD3	BAV99	BAV99
	DD4	BAV99	BAV99
	DD5	BAV99	BAV99
	DD6	BAV99	BAV99
	DD7	BAV99	BAV99
	DD8	BAV99	BAV99
	DD9	BAV99	BAV99
	DD10	BAV99	BAV99

Type	Part	Value	Device
	DD11	BAV99	BAV99
	DD12	BAV99	BAV99
	DD13	BAV99	BAV99
	DD14	BAV99	BAV99
	DD15	BAV99	BAV99
	DD16	BAV99	BAV99
Encoders	EN1	ENCODER_NO_SWITCHSW	ENCODER_NO_SWITCH
	EN2	ENCODER_NO_SWITCHSW	ENCODER_NO_SWITCH
	EN3	ENCODER_NO_SWITCHSW	ENCODER_NO_SWITCH
	EN4	ENCODER_NO_SWITCHSW	ENCODER_NO_SWITCH
	EN5	ENCODER_NO_SWITCHSW	ENCODER_NO_SWITCH
	EN6	ENCODER_NO_SWITCHSW	ENCODER_NO_SWITCH
	EN7	ENCODER_NO_SWITCHSW	ENCODER_NO_SWITCH
	EN8	ENCODER_NO_SWITCHSW	ENCODER_NO_SWITCH
	EN9	ENCODER_NO_SWITCHSW	ENCODER_NO_SWITCH
	EN10	ENCODER_NO_SWITCHSW	ENCODER_NO_SWITCH
	EN11	ENCODER_NO_SWITCHSW	ENCODER_NO_SWITCH
	EN12	ENCODER_NO_SWITCHSW	ENCODER_NO_SWITCH
	EN13	ENCODER_NO_SWITCHSW	ENCODER_NO_SWITCH
	EN14	ENCODER_NO_SWITCHSW	ENCODER_NO_SWITCH
	EN15	ENCODER_NO_SWITCHSW	ENCODER_NO_SWITCH
	EN16	ENCODER_NO_SWITCHSW	ENCODER_NO_SWITCH
ICs	IC1	74HC165D	SOIC16
	IC2	74HC165D	SOIC16
	IC3	74HC165D	SOIC16
	IC4	74HC165D	SOIC16
	IC5	74HC165D	SOIC16
	IC6	74HC165D	SOIC16
	IC7	74HC14D	SOIC14
	IC8	74HC14D	SOIC14
	IC9	74HC14D	SOIC14
	IC10	74HC14D	SOIC14
	IC11	74HC14D	SOIC14
	IC12	74HC14D	SOIC14
	IC13	74HC14D	SOIC14
	IC14	74HC14D	SOIC14
Headers	J1	WS2812	IN
	J2	WS2812	OUT
	J3	SRIO IN	PAK100/2500-10
	J4	SRIO OUT	PAK100/2500-10
	J5	DISP1-2	PINHD-2X54WALL
	J6	DISP3-4	PINHD-2X54WALL
	J7	+5V	22-23-2031
Displays	LCD1	0.96_OLED	LCD_OLED_0.96_PINS
	LCD2	0.96_OLED	LCD_OLED_0.96_PINS

Type	Part	Value	Device
	LCD3	0.96_OLED	LCD_OLED_0.96_PINS
	LCD4	0.96_OLED	LCD_OLED_0.96_PINS
LEDs	LED1	WS2812B	WS2812B
	LED2	WS2812B	WS2812B
	LED3	WS2812B	WS2812B
	LED4	WS2812B	WS2812B
	LED5	WS2812B	WS2812B
	LED6	WS2812B	WS2812B
	LED7	WS2812B	WS2812B
	LED8	WS2812B	WS2812B
	LED9	WS2812B	WS2812B
	LED10	WS2812B	WS2812B
	LED11	WS2812B	WS2812B
	LED12	WS2812B	WS2812B
	LED13	WS2812B	WS2812B
	LED14	WS2812B	WS2812B
	LED15	WS2812B	WS2812B
	LED16	WS2812B	WS2812B
Resistors	R1	220-470R	R-EU_0204/7
	R2	DNF	
	R3	DNF	
	R4	DNF	
	R5	DNF	
	R6	DNF	
	R7	DNF	
	R8	DNF	
	R9	2k2	R-EU_0204/7
	R10	2k2	R-EU_0204/7
	R11	10k	R-EU_R1206
	R12	10k	R-EU_R1206
	R13	10k	R-EU_R1206
	R14	10k	R-EU_R1206
	R15	10k	R-EU_R1206
	R16	10k	R-EU_R1206
	R17	10k	R-EU_R1206
	R18	10k	R-EU_R1206
	R19	10k	R-EU_R1206
	R20	10k	R-EU_R1206
	R21	10k	R-EU_R1206
	R22	10k	R-EU_R1206
	R23	10k	R-EU_R1206
	R24	10k	R-EU_R1206
	R25	10k	R-EU_R1206
	R26	10k	R-EU_R1206
	R27	1M	R-EU_R1206

Type	Part	Value	Device
	R28	1M	R-EU_R1206
	R29	1M	R-EU_R1206
	R30	1M	R-EU_R1206
	R31	1M	R-EU_R1206
	R32	1M	R-EU_R1206
	R33	1M	R-EU_R1206
	R34	1M	R-EU_R1206
	R35	1M	R-EU_R1206
	R36	1M	R-EU_R1206
	R37	1M	R-EU_R1206
	R38	1M	R-EU_R1206
	R39	1M	R-EU_R1206
	R40	1M	R-EU_R1206
	R41	1M	R-EU_R1206
	R42	1M	R-EU_R1206
	R43	1M	R-EU_R1206
	R44	1M	R-EU_R1206
	R45	1M	R-EU_R1206
	R46	1M	R-EU_R1206
	R47	1M	R-EU_R1206
	R48	1M	R-EU_R1206
	R49	1M	R-EU_R1206
	R50	1M	R-EU_R1206
	R51	1M	R-EU_R1206
	R52	1M	R-EU_R1206
	R53	1M	R-EU_R1206
	R54	1M	R-EU_R1206
	R55	1M	R-EU_R1206
	R56	1M	R-EU_R1206
	R57	1M	R-EU_R1206
	R58	1M	R-EU_R1206
	R59	10K	R-EU_R1206
	R60	10K	R-EU_R1206
	R61	10K	R-EU_R1206
	R62	10K	R-EU_R1206
	R63	10K	R-EU_R1206
	R64	10K	R-EU_R1206
	R65	10K	R-EU_R1206
	R66	10K	R-EU_R1206
	R67	10K	R-EU_R1206
	R68	10K	R-EU_R1206
	R69	10K	R-EU_R1206
	R70	10K	R-EU_R1206
	R71	10K	R-EU_R1206
	R72	10K	R-EU_R1206

Type	Part	Value	Device
	R73	10K	R-EU_R1206
	R74	10K	R-EU_R1206
Resistor networks	RN1	10k	BOURNS_RN_BUSSEDSOM16
	RN2	DNF/see notes	
	RN3	10k	BOURNS_RN_BUSSEDSOM16
	RN4	10k	BOURNS_RN_BUSSEDSOM16
	RN5	DNF/see notes	
	RN6	10k	BOURNS_RN_BUSSEDSOM16
Touch sensors	TS1	R-EU_TS	0204TS
	TS2	R-EU_TS	0204TS
	TS3	R-EU_TS	0204TS
	TS4	R-EU_TS	0204TS
	TS5	R-EU_TS	0204TS
	TS6	R-EU_TS	0204TS
	TS7	R-EU_TS	0204TS
	TS8	R-EU_TS	0204TS
	TS9	R-EU_TS	0204TS
	TS10	R-EU_TS	0204TS
	TS11	R-EU_TS	0204TS
	TS12	R-EU_TS	0204TS
	TS13	R-EU_TS	0204TS
	TS14	R-EU_TS	0204TS
	TS15	R-EU_TS	0204TS
	TS16	R-EU_TS	0204TS

Versions

v1.0: first release.

Assembly

Decide on the layout. Only four encoders are supported. ENSW1 and ENSW4 are always available; EN2/ENSW2 and EN3/ENSW3 share pins. The switch for ENSW2/ENSW3 is also shared. This way one can choose whether to have switched encoders or encoders illuminated with WS2812B LEDs.

If illuminated encoders are desired, install these and the associated capacitors first.

Next diodes and resistors/links. Align the diode band with the silkscreen legend. Next the two electrolytic caps.

OLEDs could be socketed using a right-angle pin header. This means a corresponding female header would need to replace the standard 7-pin one common to these displays.

Headers, switches and encoders come last. Note the flat part of the switch, which must align with the DT6 switch body. Illuminated encoders should be raised up around 2mm to fit over the LED and still

turn freely.

Interconnection to Core

Headers are mentioned above. DIN/DOUT connect to DINX4/DOUTX4 or a DIOMATRIX. J10B to J10B

Dimensions

cs1.zip

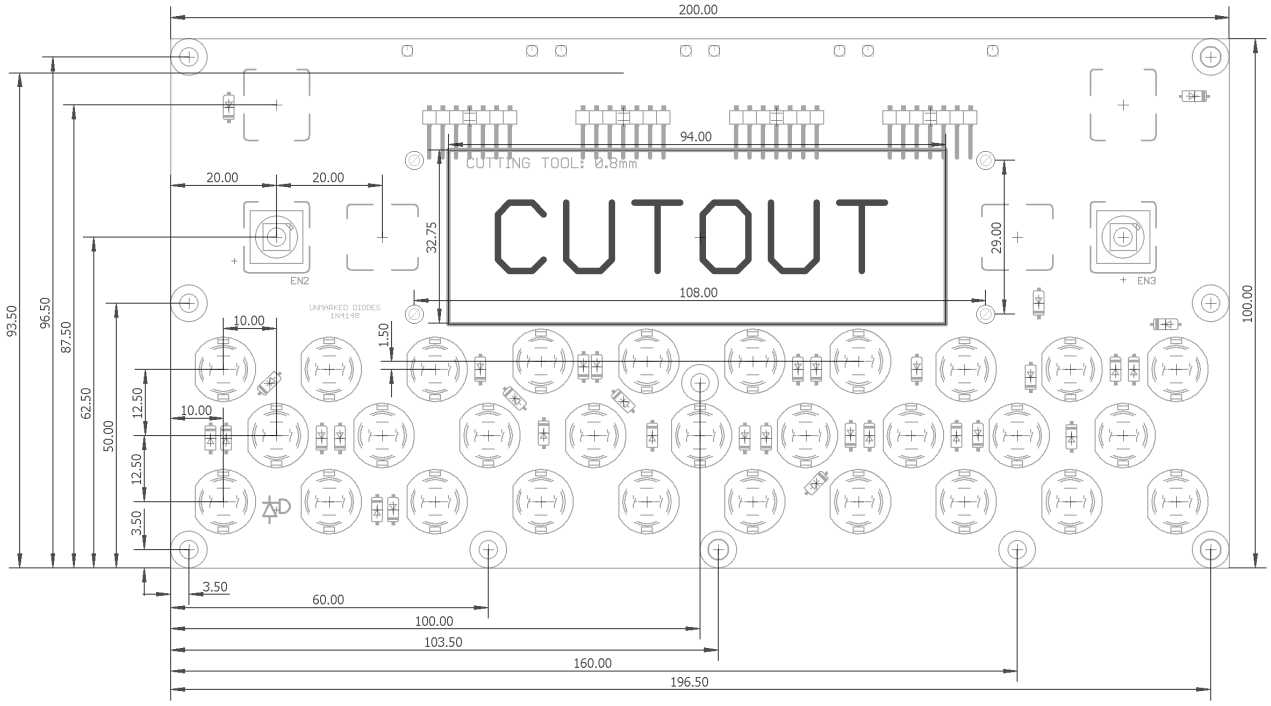

License

Currently the design is © 2018 antilog devices with all rights reserved; all documentation is CC BY-NC-SA 3.0.

From:
https://www.midibox.org/dokuwiki/ - **MIDIbox**

Permanent link:
https://www.midibox.org/dokuwiki/doku.php?id=elo&rev=1520678789

Last update: **2018/03/10 10:46**