Rotary Encoders

This page is to inform you about MIOS' handling of incremental rotary encoders, or just 'encoders' or 'encs' for short.
These are the endless-turning knobs that you can use to set values on your device. These should not be confused with a potentiometer. See the FAQ entry about encoders for more info regarding the distinction between the two, and the Where to order page for retailers.

Encoder Model Specifications

Bourns PEC11-series detented encoders (From SmashTV)

Encoder mode: “DETENTED2”, 24 steps per turn

Pinout: http://www.avishowtech.com/mbhp/images/encspecs17.gif

Note: the rightmost picture is “top down” (as seen from the top of the encoder looking down to the shaft)

pin “A” goes to D1

pin “C” goes to Vs

pin “B” goes to D0

(This means that, encoder C pin is “common”. Encoder B pin goes to lower numbered DIN pin (of two pins assigned to that encoder) and encoder A pin to higher numbered DIN pin.)

the detent can be removed

Thanks go to:

mandingo: http://www.midibox.org/forum/index.php?topic=3843.msg25094#msg25094

jdutcher: http://www.midibox.org/forum/index.php?topic=3911.msg25766#msg25766

xcoulonx: http://www.midibox.org/forum/index.php?topic=3299.msg23699#msg23699

Encoders from VOTI (ALPS STEC16B) and SoundWell

M-SW-ROT, detented rotary encoder from www.voti.nl or SoundWell EC162102E1B-HA1-006

Encoder mode: “DETENTED2”, 24 steps per turn

pinout: http://www.voti.nl/docs/rotary-encoder.jpg

if you view the encoder from the top with the pins pointing towards you;

left pin goes to D1 (highest numbered din pin)

middle pin goes to D0 (lowest numbered din pin)

right pin goes to Vs (ground)

the detent can also be removed

To remove the detents:

- Bend the four clasps back

- Remove the bottom

- Bend down (or up, depending on your perspective) the half-circle thingie. (You may choose to flatten the nub, or bend down the metal half-circle. Or you could even go so far as to separate the white plastic from the metal bottom and remove the detent disc completely with no fuss. It snaps right back together (pic coming). Either way will accomplish the job. The point is to move the metal nub that falls into the valleys on the spinning disk.)

- Re attach to the bottom

- Bend the clasps back.

Encoders from Pollin

Pollin (http://www.pollin.de) has cheap encoders with button.

In MIOS8 1.9g use the new encoder mode “MIOS_ENC_MODE_DETENTED4” (details). Previous versions should use encoder mode: “DETENTED”, 16 steps per turn.

Forum Links

http://www.midibox.org/forum/index.php?topic=6693.0 (German)

http://www.midibox.org/forum/index.php?topic=7140.0 (English)

Pinout

(laying the encoder before you, cap pointing towards you, pins on top):

0: GND (button)

1: pin A (eg D0)

2: GND (enc)

3: pin B (eg D1)

4: pin C (button, eg D2)

Removing Detents

(from http://www.midibox.org/forum/index.php?topic=6693.0)

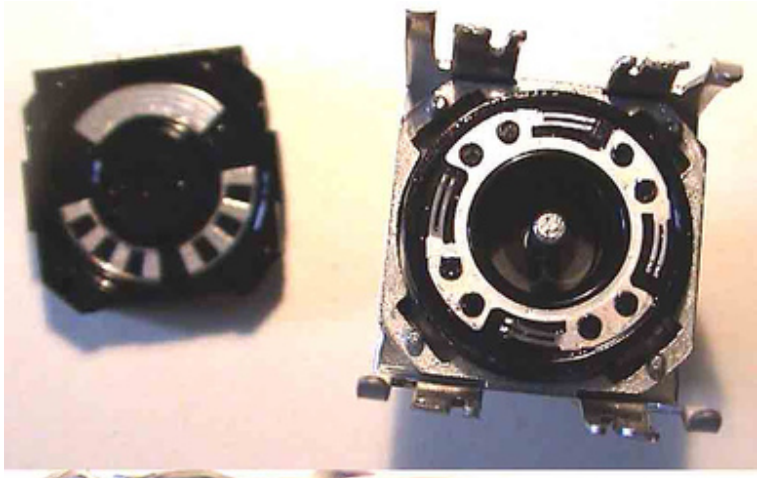



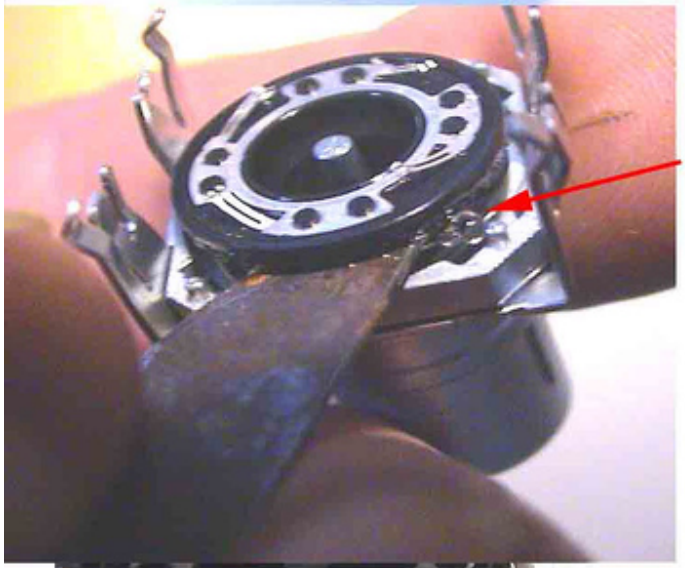

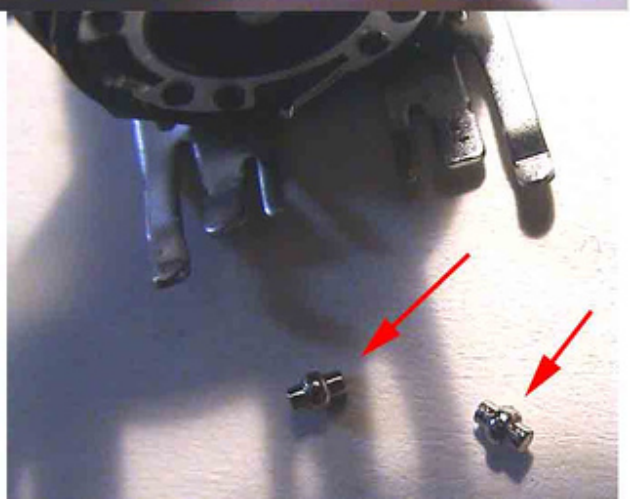

Encoder Detent Types

In applications (prior to MIOS8 1.9g), you have to choose one of the encoder types:

MIOS_ENC_MODE_NONDETENTED
MIOS_ENC_MODE_DETENTED
MIOS_ENC_MODE_DETENTED2
MIOS_ENC_MODE_DETENTED3

This image describes the different encoder modes which are natively supported by MIOS:

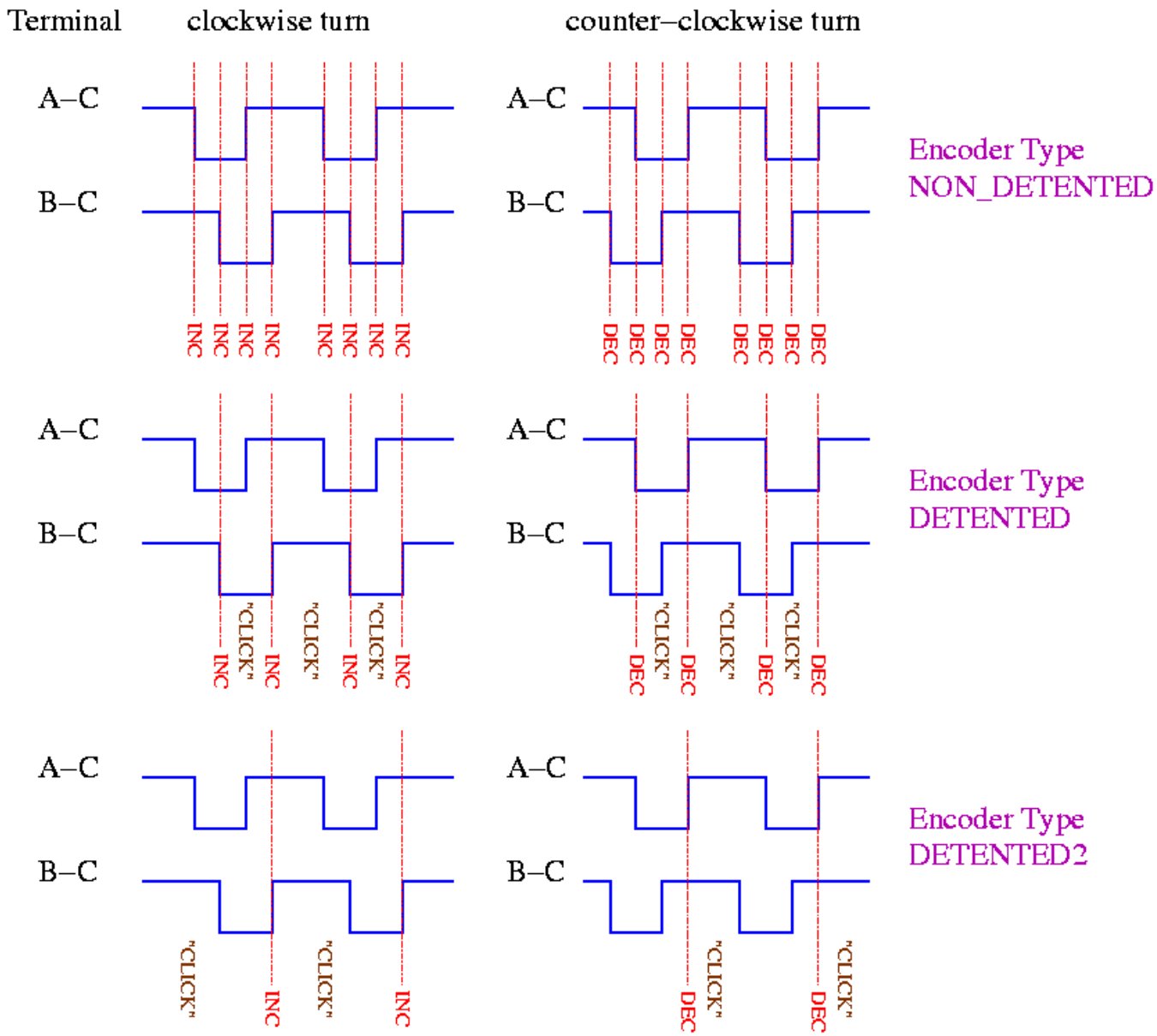

The encoders will behave with an 'acceleration' feature, similar to that of the PC mouse - when you turn the encoder faster, the values will increase at a faster rate. This mean that you can turn the knob slowly for more precise adjustment, or turn quickly for coarse adjustment of parameters.

MIOS8 version 1.9g reworks all of the encoder types and adds new ones. Link: http://www.midibox.org/forum/index.php/topic,14159.0.html

Explanation about the encoder resolution and detented/nondetented types

By SilverZero in this forum article:
http://www.midibox.org/forum/index.php/topic,13116.msg112139.html#msg112139

Detented encoders pose a mechanical limit to the resolution, because one “click” of an encoder may actually run through four events.

Non-detented encoders will feel smoother, like a pot, and will offer un-encumbered resolution down to the level supported by the software.

There are different encoder modes to decrease the resolution to compensate for detented action. There is a software enhancement to allow progressive “acceleration” for faster sweeps.

There is no requirement that one use either detented or non-detented encoders - it is ultimately a matter of personal preference and your own requirements (higher resolution, quicker sweeps, tactile feedback/feel, etc.).

And in the end, with the right software tweaks, all of the limitations of a detented encoder can be removed. But you can't add tactile feedback (clicks) to a non-detented encoder.

From:
https://www.midibox.org/dokuwiki/ - **MIDIbox**

Permanent link:
https://www.midibox.org/dokuwiki/doku.php?id=encoders&rev=1254882244

Last update: **2009/10/07 02:24**