Fantoms PCBs

On this page I will list pcb designs I made. Some are tested, some are not. I will add a note to every PCB.

Fatar keybed adapter

This is a adapter which is made for connect a FATAR keybed directly to the DIO-matrix without soldering. The rest should be self explaining.

Status: **tested - working**

Download: Fatar adapter

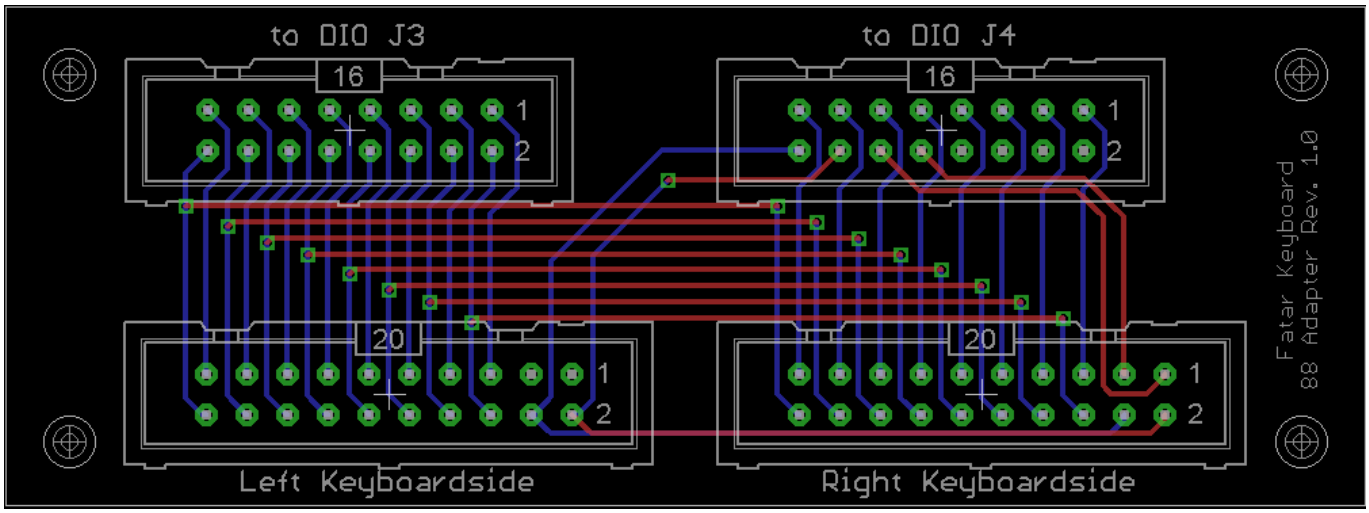

From:
https://www.midibox.org/dokuwiki/ - **MIDIbox**

Permanent link:
https://www.midibox.org/dokuwiki/doku.php?id=fantomxr&rev=1421360813

Last update: **2015/01/15 22:26**