Fantoms PCBs

On this page I will list pcb designs I made. Some are tested, some are not. I will add a note to every PCB.

Fatar keybed adapter

This is a adapter which is made for connect a FATAR keybed directly to the DIO-matrix without soldering. The rest should be self explaining.

Status: **tested**
Eagle *.brd: Fatar adapter

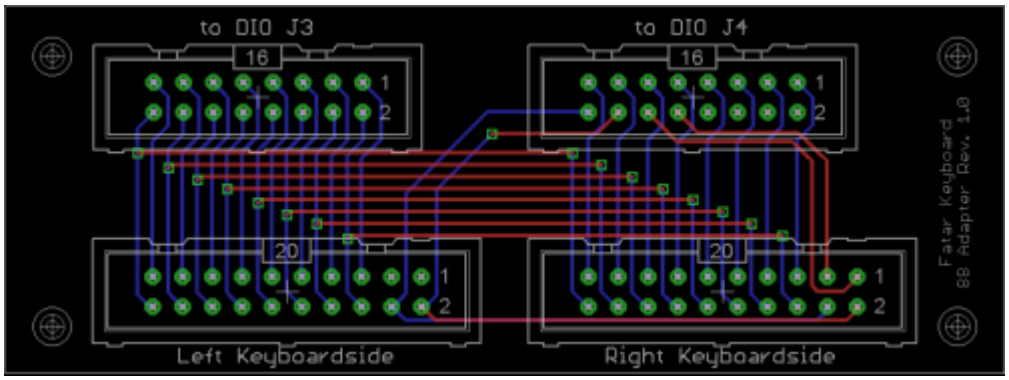

LED Ring

This is a LED ring which contains 15 LEDs arranged in a ring and the last LED as indication-led for the switch of an encoder. The LEDs are 0805 SMD type.

Status: **untested**
Eagle *.brd: not released yet

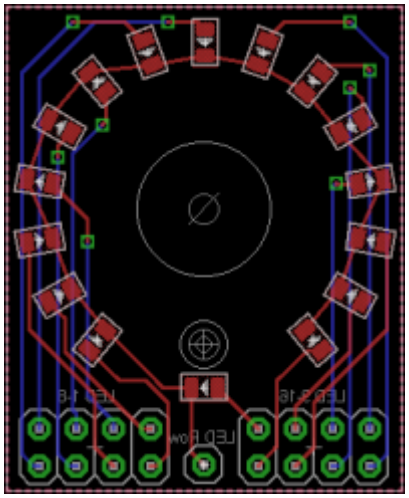

LED Bar

This is a LED bar which contains 13 LEDs arranged in a bar The LEDs are 0603 SMD type.

Status: **tested**
Eagle *.brd: LED Bar

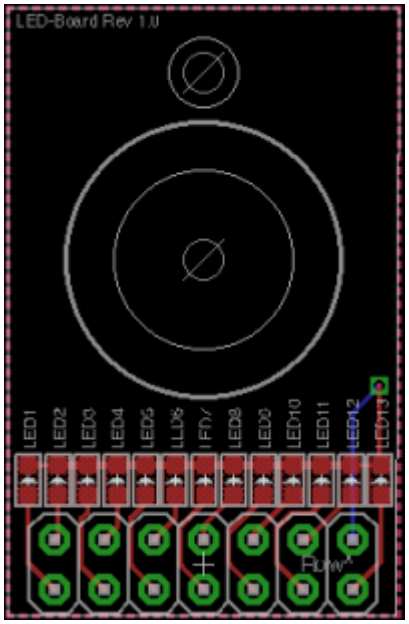

4x Switchboard

This is a PCB for four marquardt 6425 switches, available with and without LEDs. In case you want to connect a DIO matrix to it, I added footprints for resistors but there are solder bridges too. In any case: Either solder the solder bridge or add a resistor to get the LEDs working. In case you only need two or three switches, you can simply cut it. I added two-pin-pinheader to every switch for connecting

the LEDs.

Status: **tested**
Eagle *.brd: 4x Switchboard

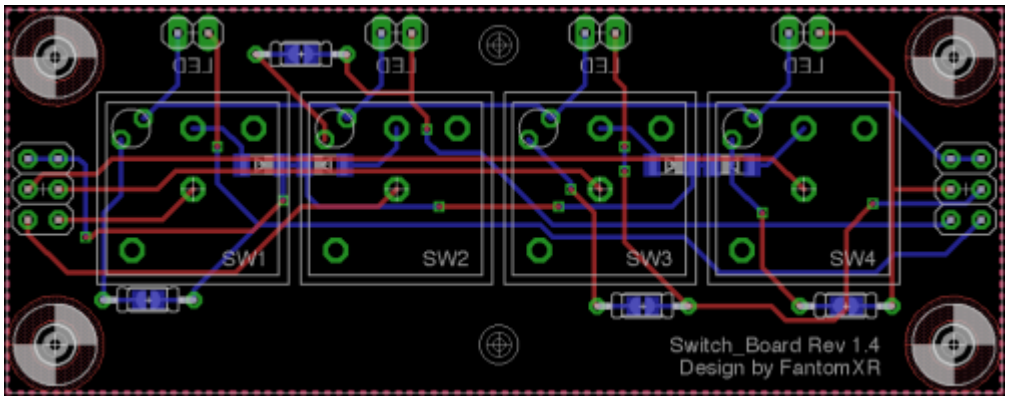

8x Switchboard

See above. SMD resistors are used here.

Status: **tested**
Eagle *.brd: 8x Switchboard

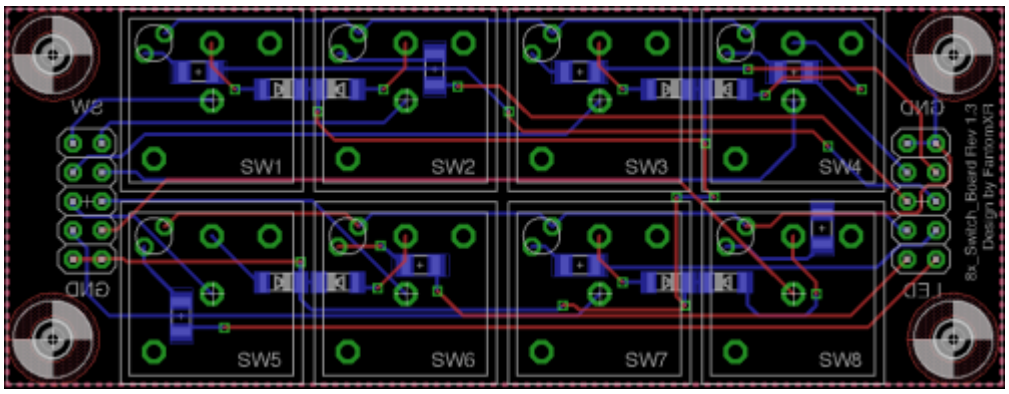

From:
https://www.midibox.org/dokuwiki/ - **MIDIbox**

Permanent link:
https://www.midibox.org/dokuwiki/doku.php?id=fantomxr&rev=1421705758

Last update: **2015/01/19 22:15**