Fantoms PCBs

On this page I will list pcb designs I made. Some are tested, some are not. I will add a note to every PCB.

LED Ring

This is a LED ring which contains 15 LEDs arranged in a ring and the last LED as indication-led for the switch of an encoder. The LEDs are 0805 SMD type.

Status: **untested**
Eagle *.brd: not released yet

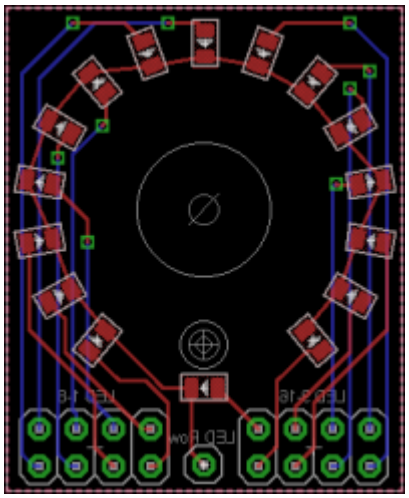

LED Bar

This is a LED bar which contains 13 LEDs arranged in a bar The LEDs are 0603 SMD type.

Status: **tested**
Eagle *.brd: Download

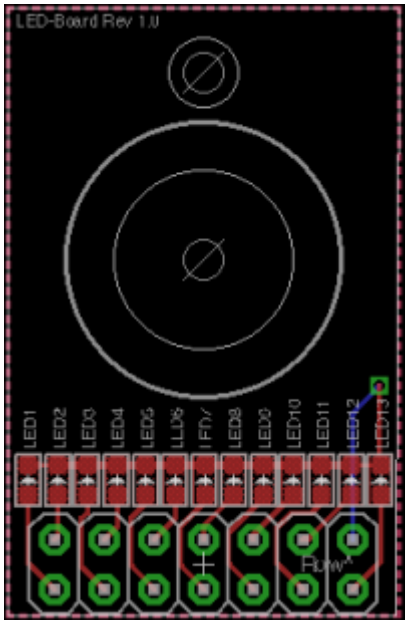

4x Switchboard

This is a PCB for four marquardt 6425 switches, which are available with and without LED. In case you want to connect a DIO matrix to it, I added footprints for resistors but there are solder bridges too. In any case: Either solder the solder bridge or add a resistor to get the LEDs working. I added smd diodes to connect those buttons in a matrix. In case you only need two or three switches, you can simply cut it. I added two-pin-pinheader to every switch for connecting the LEDs. Regarding the 2x3pin header please refer to the split module.

Status: **untested**
Eagle *.brd: Download

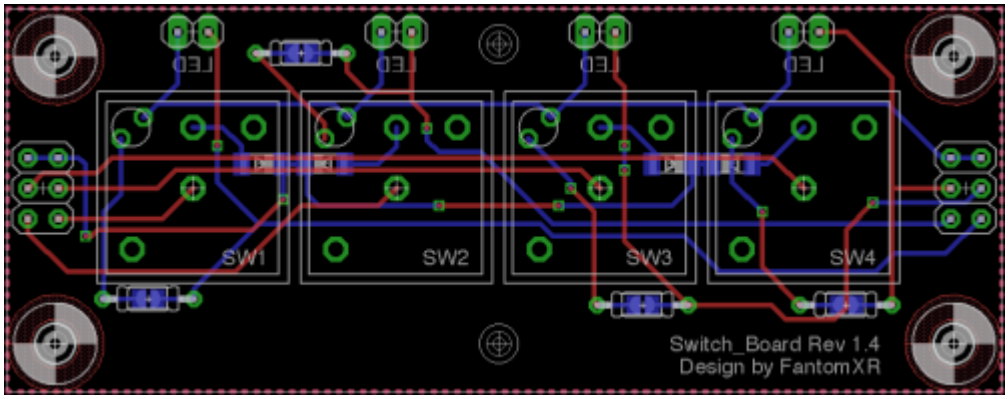

8x Switchboard

SMD resistors and diodes are used here to use this board in a matrix. If you want to connect it directly

to a DIN, just bridge the soldering pads of the diode... or add a diode...

Status: **untested**
Eagle *.brd: Download

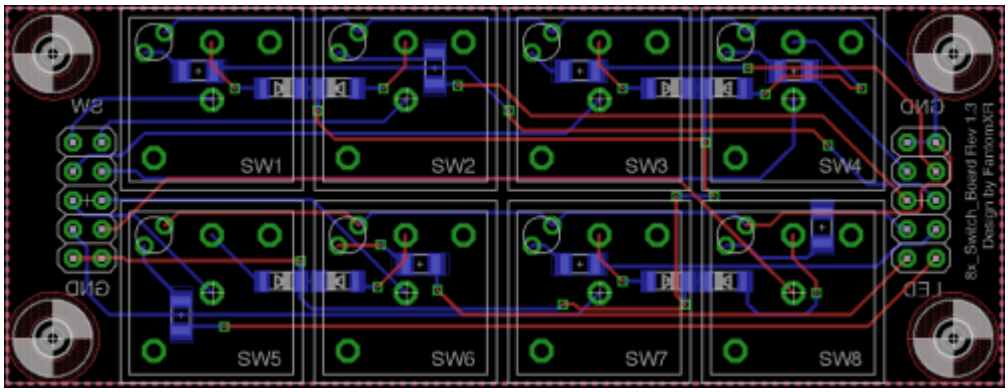

Fatar keybed adapter

This is a adapter which is made for connect a FATAR keybed directly to the DIO-matrix without soldering. The rest should be self explaining.

Status: **tested**
Eagle *.brd: Fatar adapter

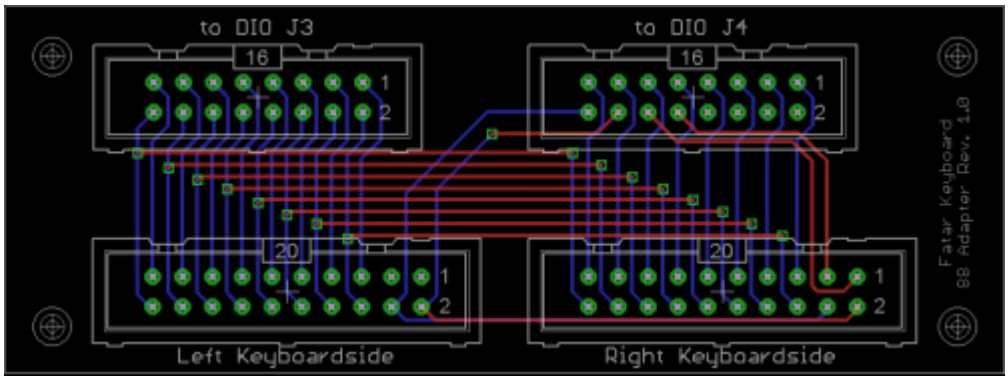

DIO Adapter 2x6pin

This is a adapter which I made for an easier matrix connection in conjunction with my switchboards (see above). Just connect the 8pins of the top row of J3 on the DIO to the DIO Input on this board + one of the pins of the bottom row of J3 to the row-input. The forward-connector allows to chain these pcbs.

Status: **untested**
Eagle *.brd: Download

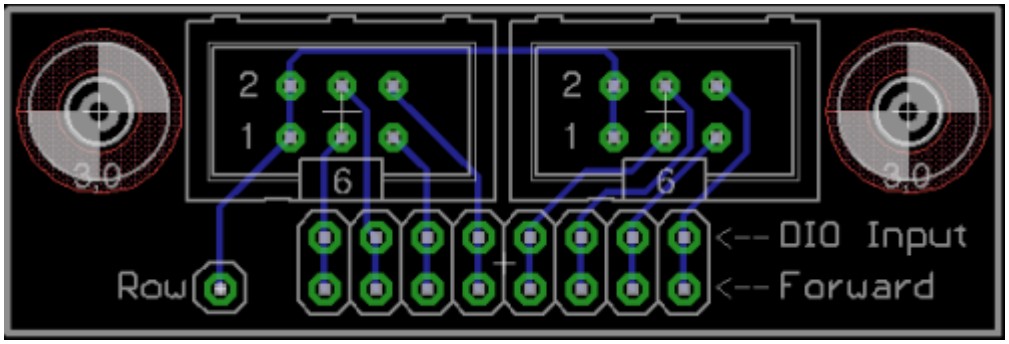

DIO Adapter 1x10pin

Same as above but for 10pin. Can also be chained.

Status: **untested**
Eagle *.brd: Download

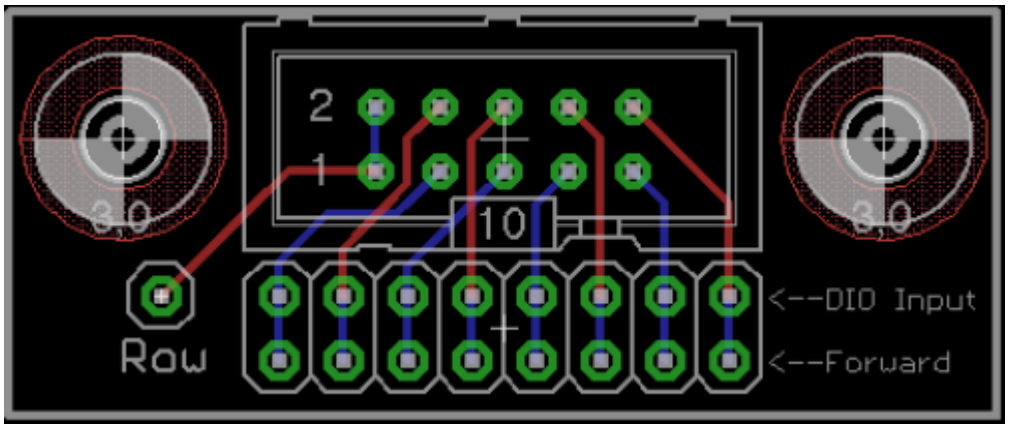

10pin splitter

This is an adapter for split an 10pin pinheader into 2x 6pin. This is useful, if you want to connect two of my 4x switchboards directly to a DIN module.

Status: **untested**
Eagle *.brd: Download

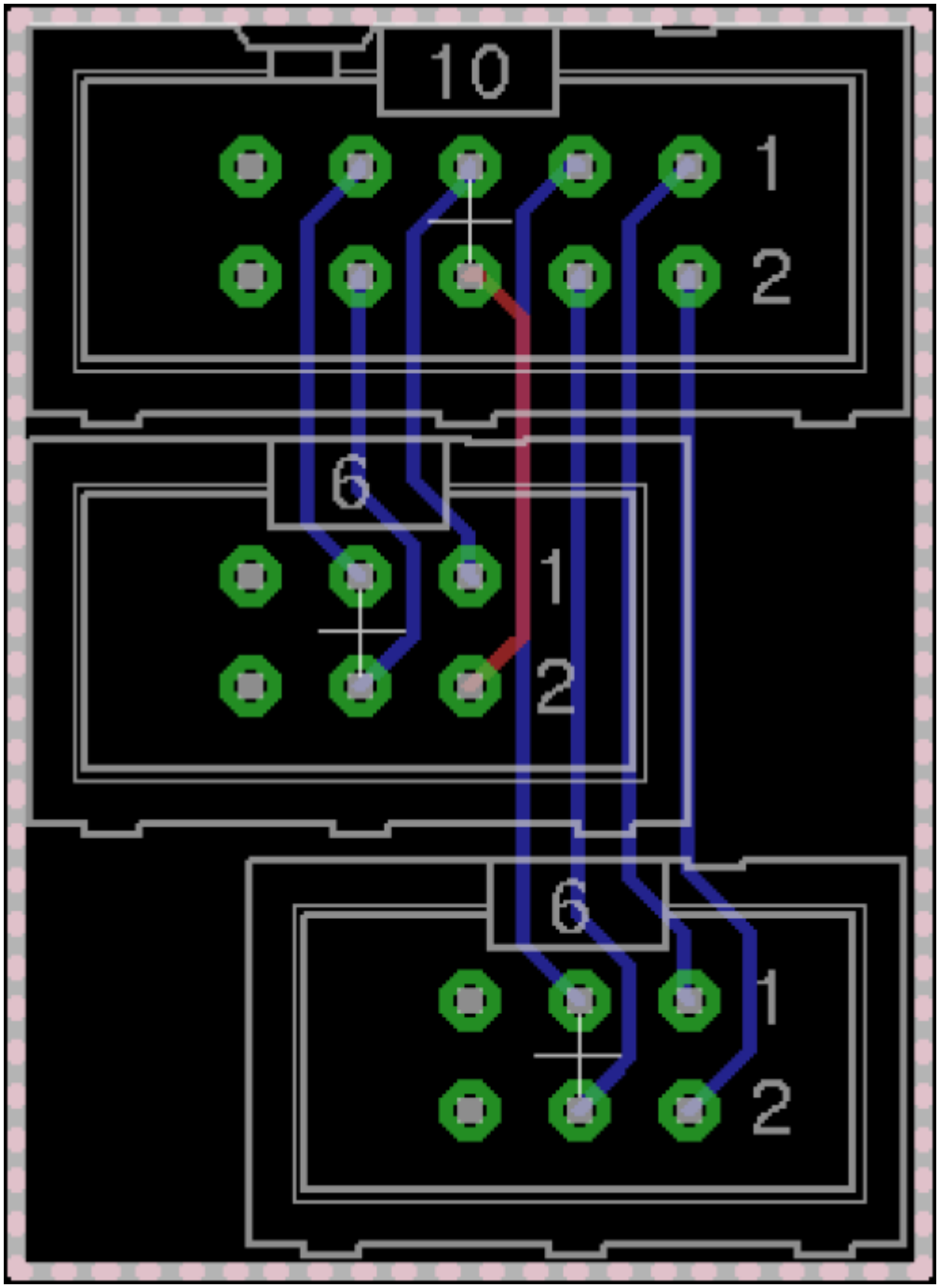

From:
https://www.midibox.org/dokuwiki/ - **MIDIbox**

Permanent link:
https://www.midibox.org/dokuwiki/doku.php?id=fantomxr&rev=1421843587

Last update: **2015/01/21 12:33**