fnpSID Module

This page is dedicated to Flexinoodle's & nILS' stereo USB implementation MIDIBox SID v2. All information present on and files linked to from this site are

© 2009 nILS Podewski. Free for private, non-commercial use. All other rights reserved.

PCB overview

The PCB is 6.3 x 3.9 inches (16 x 10 cm) (Eurocard) and looks like this:

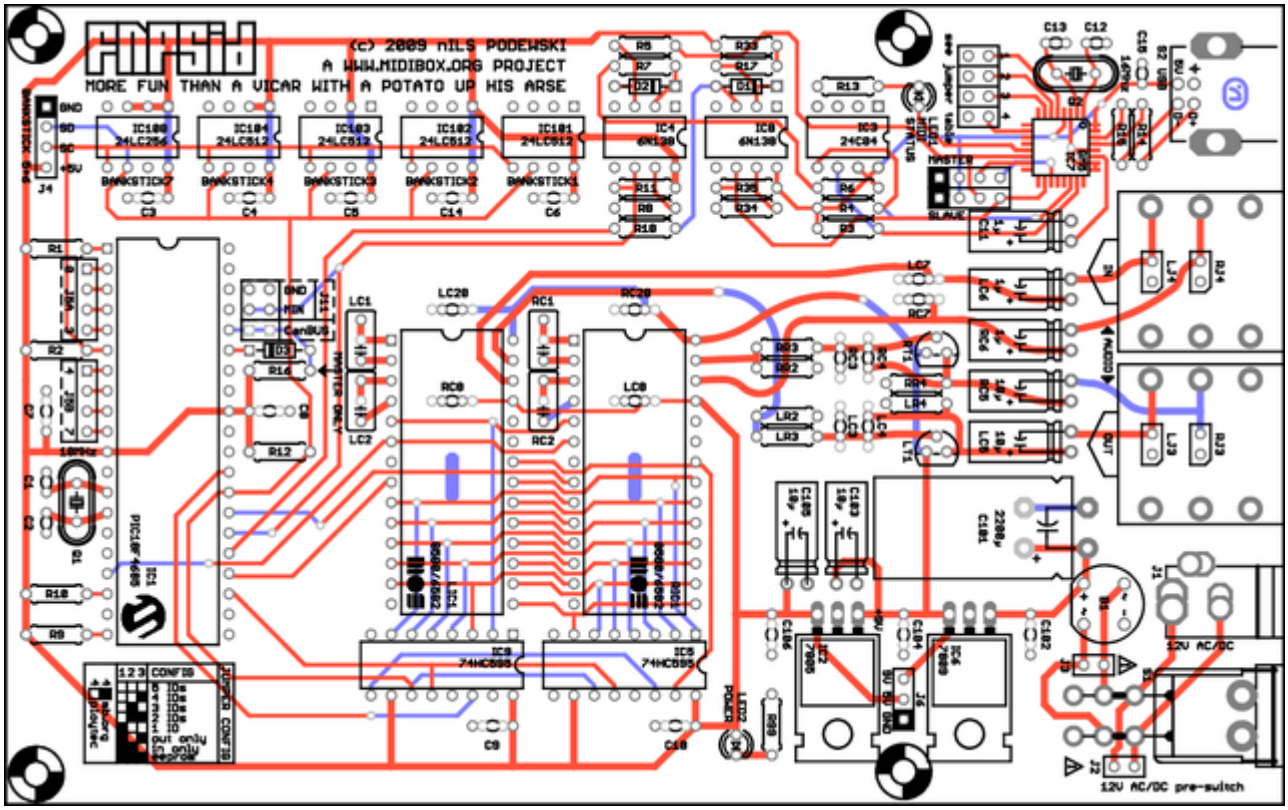

(click for full size)

A .pdf version is available here

Connectors

Name	Number of pins	Description
S2	1	USB connector
S1	1	On/Off Switch
J2	1	12V input (AC/DC)
In	1	1/4“ Stereo Jack for audio input
Out	1	1/4” Stereo Jack for audio output
J3	1	12V power source (After switch)
J2	1	12V power source (Before switch)
J11	1	CANbus connection
J4	2	Jumper for adding banksticks 5/6 if needed

Part list / BOM

Part	Value	Count	Footprint/ lead spacing	Part #
SID	6582/8580	2	-	LIC1,RIC1
GM5	GM5	1	TQFP32	IC7
PIC18F4685-I/P	PIC18F4685	1	DIP40	IC1
Shift Register	74HC595	2	DIP 16	IC5,IC9
Optocoupler	6N138	2	DIP 8	IC4,IC8
Voltage Regulator TO220	7805	1	-	IC2
Voltage Regulator TO220	7809	1	-	IC6

EEPROM	24C04	1	DIP8	IC3
EEPROM	24LC512	4	DIP8	IC101 - IC104
EEPROM	24LC256	1	DIP8	IC108
Crystal	10.0 MHz	1	HC49	Q1
Crystal	16.0 MHz	1	HC49	Q2
LED 3mm	-	2	-	LED1,LED2
Diode	1N4148	3	-	D1 – D3
Bridge Rectifier	B40C800	1	-	B1
Transistor TO92	BC547C	2	-	LT1,RT1
Ceramic Capacitor	470p	2	-	LC4,RC4
Ceramic Capacitor	22p	2	-	C12, C13
Ceramic Capacitor	33p	2	-	C1, C2
Electrolytic Capacitor	10µ	4	-	C103, C105, LC5, RC5
Electrolytic Capacitor	2200µ	1	-	C101
Electrolytic Capacitor	1µ	3	-	C11, LC6, RC6
Electrolytic Capacitor	10µ	4	-	C103, C105, LC5, RC5
Polyester Film Capacitor (Xicon)	22n	4	-	LC1, LC2, RC1, RC2
Capacitor	330n	1	-	C102
Capacitor	1n	4	-	LC3, LC7, RC3, RC7
Capacitor	100n	15	-	C3 - C10, C14, C104, C106, LC8, LC20, RC8, RC20
Resistor	1k	9	-	LR2, LR4, R2, R3, R4, R12, R16, RR2, RR4
Resistor	1k2	2	-	R11, R35
Resistor	5k6	2	-	R8, R34
Resistor	10k	4	-	LR3, R9, R10, RR3
Resistor	27	2	-	R14, R15
Resistor	100	1	-	R1
Resistor	220	8	-	R5, R6, R7, R13, R17, R18, R33, R99
DPDT Switch	-	1	-	S1
1/4“ switched stereo socket	-	2	-	IN_L,OUT_L
USB type B socket	USB-B	1	-	S2
Pin Header	40	1	-	
2.1/2.5mm DC power socket	PJ-202AH	1	-	J1

Hardware Options

There are multiple hardware options for the fnpSID
1. Single PCB StereoSID
2. Dual PCB QuadSID MIDI linked
3. Dual PCB QuadSID CANbus linked

Assembly Guide

The following sections will guide you through the entire process of getting your fnpSID up and running. Take one step at a time and you'll be done in a jiffy.

1. Soldering

1. First solder in the GM5 chip (It's beyond the scope of this page to give tutorials on SMD. Needless to say check YOUtube for vids and check out Flexi's GM5 notes)

2. Solder in all the resistors (Solder the resistor “suited” meaning all in the same direction - because believe me it does aid in diagnosing any issues later)

3. Solder in the diodes (Be sure you have them in the right direction: black line on the diode goes to the screen print line on the PCB)

4. Solder in the capacitors but leave the electrolytics until later (This is purely a height thing it makes it easier to solder other components so leave the big ones for now)

5. Solder in the transistors (Be sure to line them up correctly)

6. Solder in the bridge rectifier (Make sure the + leg goes to the + screen printed on the PCB)

6. Solder in the two LEDs (The screen print triangle on the PCB points to the cathode which is the short leg)

7. Solder in the two voltage regulators (Make sure you bend the legs before soldering and dont worry too much if the hole doesn't line up with the board as you won't need to screw them to the board)

8. Solder an 8-pin DIL header into the GM5 jumper (to the left of the GM5)

9. Solder a SIL header into the MASTER jumper (We will discuss the slave header in the slave soldering addendum later)

10. Solder in the GM5 crystal Q2 (Make sure you use the 16mhz crystal)

11. Solder the core crystal Q1 (Make sure you use the 10mhz crystal)

12. Solder in all the IC sockets (You can work these out for yourself, make sure the mark goes on the right side)

13. Solder in the electrolytic capacitors (Make sure the polarity is correct - the line on the capacitor is the negative side. Again, it helps to bend the pins before soldering the capacitor)

14. Solder in your external connectors (USB/Power/Switch/Audio jacks in that order)

15. Thats all the soldering done time to move on to testing. Do not stuff any of the ICs yet.

2. Testing

1. Turn the power switch off (down position)

2. Plug in the wallwart.

3. If in step 4 the power LED (LED2) does not light up or you get funny smells or magic smoke unplug the PSU immediately.

4. Turn the power switch on.

5. Whilst powered check the voltages across these pins:

Pins	Voltage
IC1:11(Vcc) - IC1:12(Vss)	5V
IC1:32(Vcc) - IC1:31(Vss)	5V
LIC1:25(Vcc) - LIC1:7(Vcc)	5V
RIC1:25(Vcc) - RIC1:7(Vcc)	5V
LIC1:28(Vdd) - LIC1:28(Vss)	9V
RIC1:28(Vdd) - RIC1:28(Vss)	9V

If all the voltages are good, continue - let's finish up.

Finishing up

1. Install the PIC into IC1 (Make sure the notch at the end of the PIC lines up with the screen printed notch on the PCB)

2. Install the 74HC595s into IC9,IC5 (Again line up the notch with the screen print notch)

3. Install the 24C04 into IC3 (Hmmm something about notches i think ?)

4. Install the 6N138's into IC4,IC8 (take a guess)

5. Install the 24LC512 into IC101 - 104 (Meh)

6. Install the 24LC256 into IC108 (Yup)

7. Install the SIDs into LC8,RC8 (Yay)

8. Plug in the USB cable and connect to your computer (The computer should find the GM5 and use the OS's built in driver)

9. Load MIOS Studio and connect its output to GM5 port 1 and its input to GM5 port 1 (Just click on routing and its pretty self explanatory)

10. Turn on MIOS Studio MIDI monitors and then turn on your fnp (You should see a couple of SYSEX commands recieved by MIOS Studio)

11. Upload the 8580.hex to the fnp (you can find instructions to do this atucapps.de)

12. Show MIOS Studio virtual keyboard and play a few keys (You should hear the default patch playing from the fnp)

13. Turn the fnp off then back on (you should hear a bleep for each bankstick installed)

14. Screw the rear panel onto the two side pieces of your enclosure and then slide in the top and

bottom panels (Makes life easier doing the back panel first)

15. Slide your fnp board into the lowest slot in the case and then screw on the front panel (Don't forget to remove the audio sockets panel nuts and refit them when finished)

16. Install the SID soundbanks (More info on this later)

Go play at being a SID superstar

Order lists

Join the group buy bitch heheheheh yep this is a placeholder

FAQ - Frequently Asked Questions

Q: Can I have the .brd or .sch file?

A: No.

Q: Why can't I have the .brd or .sch file?

A: What is this? A FAQ or something?

Q: What does “fnp” stand for?

A: **F**lexinoodle **n**ILS **P**odewski

Q: can I haz cheezburger?

A: Hmmmm let me think hmmmm erm NO

Flexi's GM5 Notes

Ok, when I started building the prototype of the fnpSID, I hadn't actually soldered for about 4 years

I tried every possible method I had seen to try and solder this chip and was totally convinced that - you know what - “I just couldn't solder anymore”.

So, after an hour of solidly frying the chip with the iron at 425 degrees and finally managing to get some solder to at least heat up and solder the legs nILS told me to solder in some components to see if it still worked. Needless to say I didn't hold out high hopes. Anyway, when I tried to solder in the first resistor it was all the same: “I just couldn't solder anymore”

Very frustrated I took a break and then checked the tip of my iron. Yes, the tip that nILS and I had chosen for the iron was the wrong one, even though I had checked with the supplier many times to make sure. The tip had overheated, pitted, blackened and was basically a horrific mess. I changed the tip back to the one that came with the iron (too big but what the hey).

About two minutes later I had soldered all the needed components to test and hey, guess what? Yep, that's right the GM5 worked perfectly. The thing to take from this story is this

1. Always check ya bloomin tools

2. Dont be scared of soldering the GM5 because if a gimpazoid newb like me can solder it after an hour of frying and not kill it, ANYBODY CAN SOLDER IT

- Flexinoodle

From:
https://www.midibox.org/dokuwiki/ - **MIDIbox**

Permanent link:
https://www.midibox.org/dokuwiki/doku.php?id=fnp-sid&rev=1236192989

Last update: **2009/03/04 18:56**