MIDI IN
MIDI OUT
CLEAR
STORE
MENU
STOP
CLOCK
2 3 4 5 6 7 8
METRONOME
1 B4 MCF BCF Rcl
120 P 1 4: 3:
PLAY
AL METRONOME MASTER

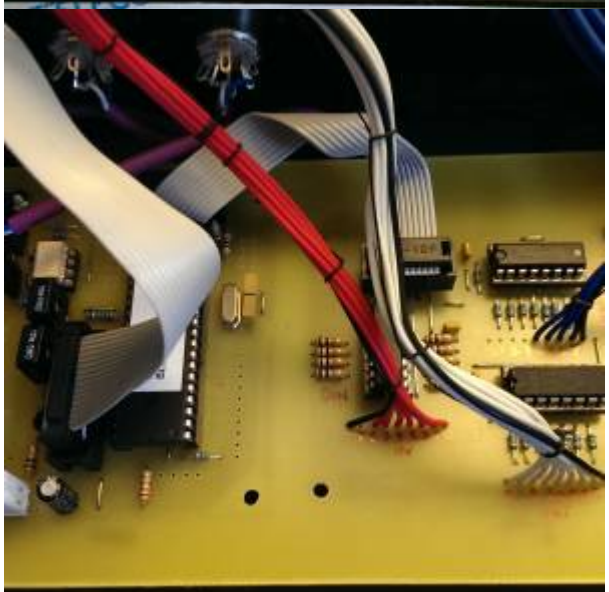

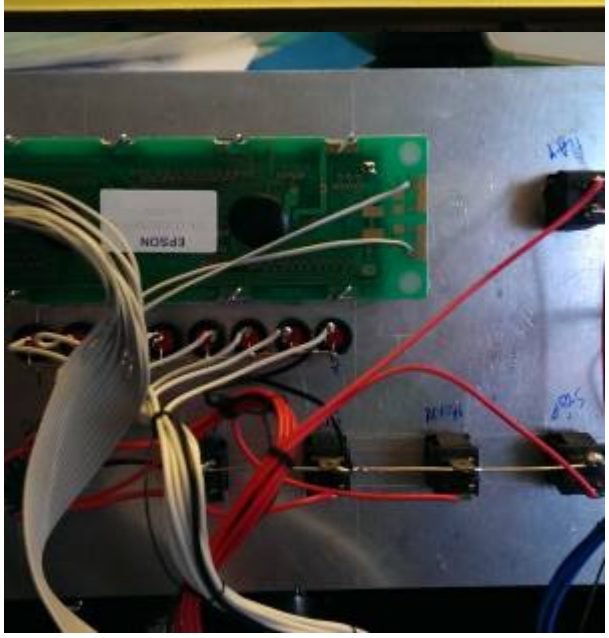

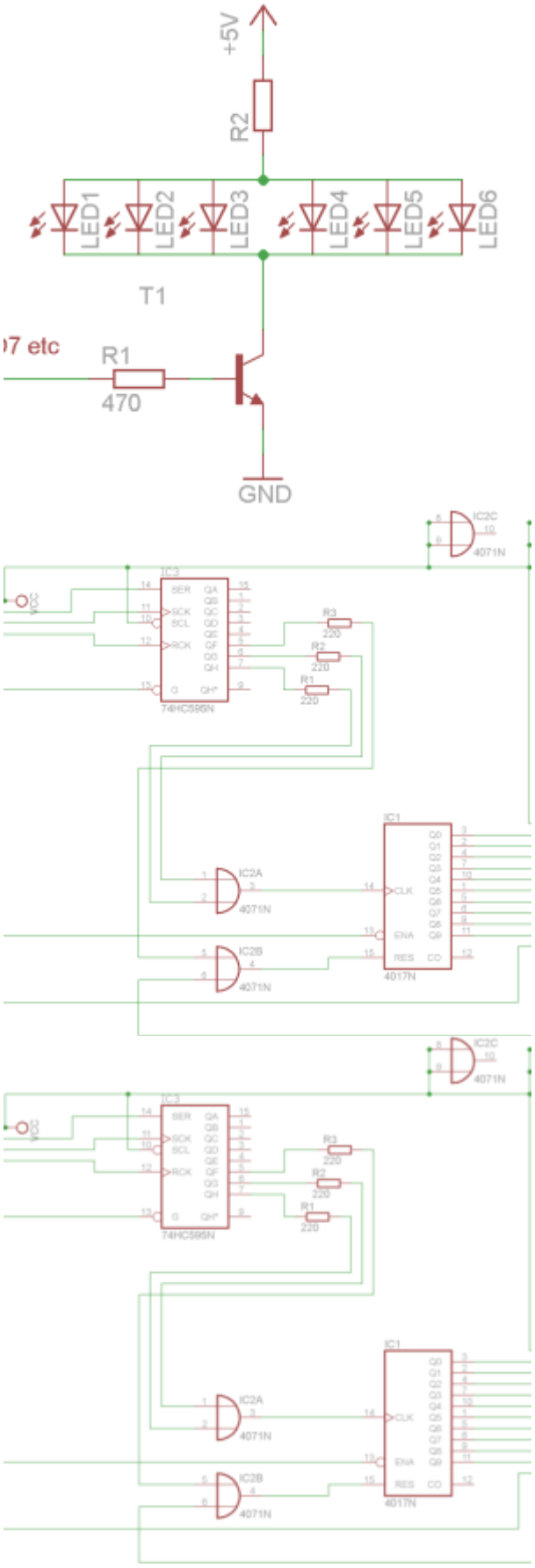
+5V
R2
LED1
LED2
LED3
LED4
LED5
LED6
T1
7 etc
R1
470
GND
IC2C
4071N
IC3
74HC595N
R3
220
R2
220
R1
220
IC1
4017N
IC2A
4071N
IC2B
4071N

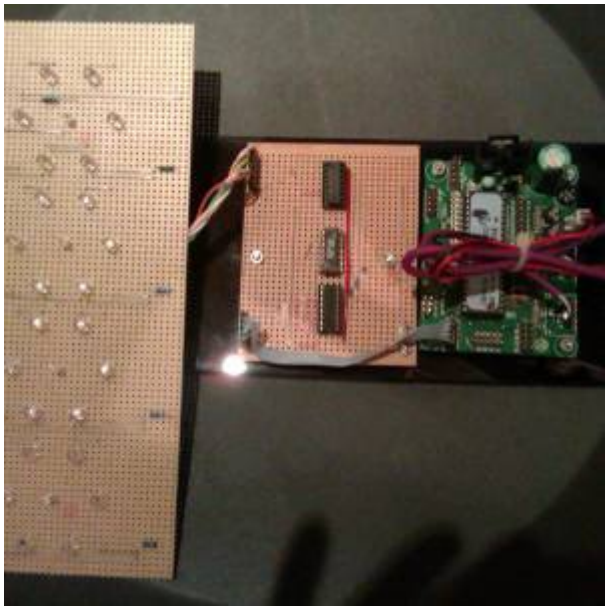

From:
https://www.midibox.org/dokuwiki/ - **MIDIbox**

Permanent link:
https://www.midibox.org/dokuwiki/doku.php?id=gomiboy99&rev=1333284581

Last update: **2012/04/01 12:49**