LoopA - Eurorack - Frontpanel with breakout PCB

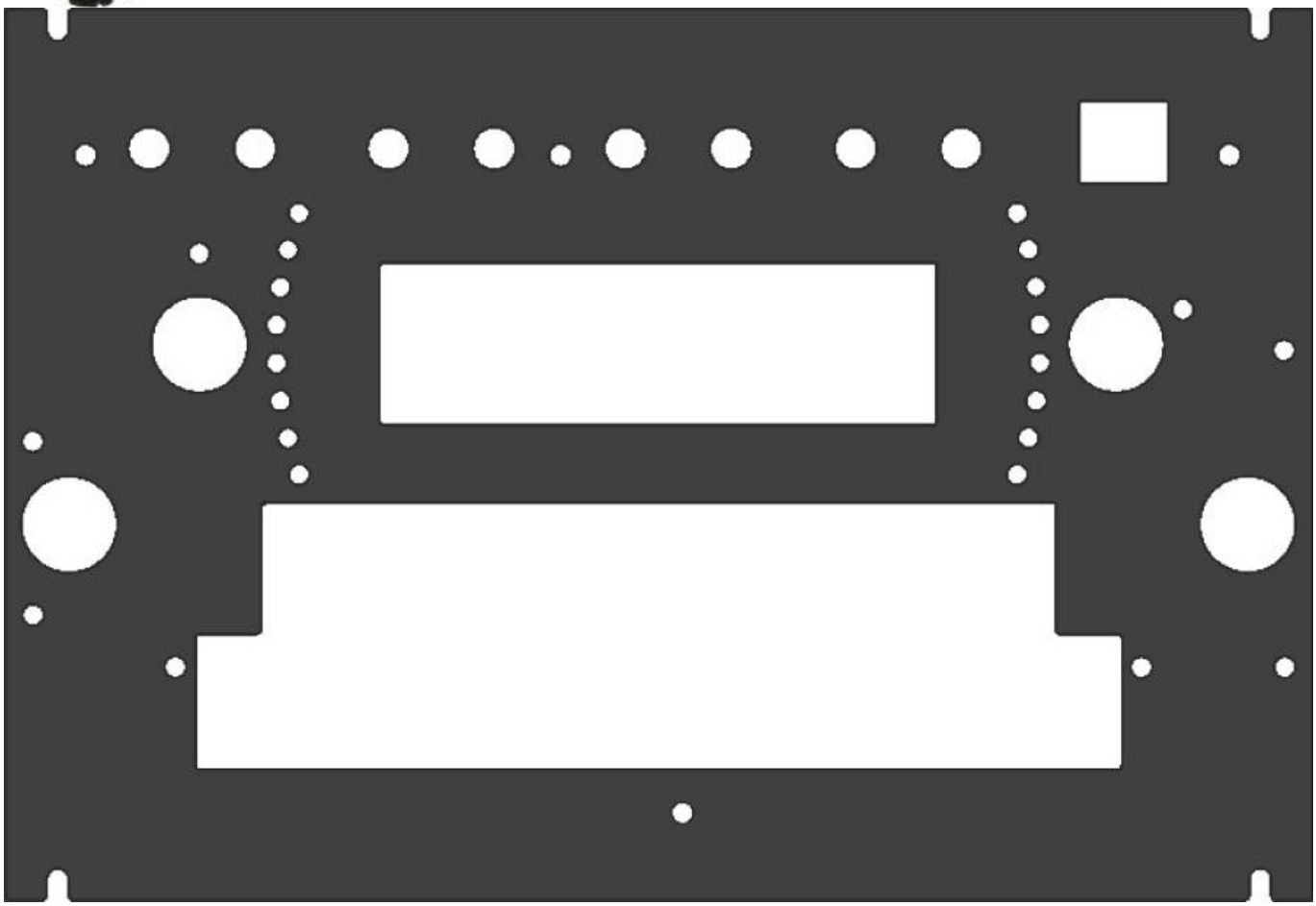

I made this Breakout-PCB and Frontpanel for the midiphy LoopA midiphy LoopA

PCB Size is 172x24mm
You have to decide if you want Midi Out 3 or the Gate OUT (space thing)
The Reset Switch and the SD, Card, are still on the base PCB...
If you want use the PCB you dont have place for the stock DIN Sockets!

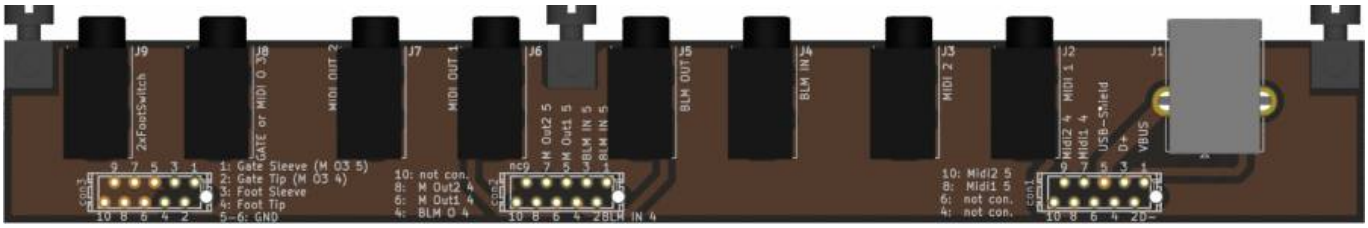

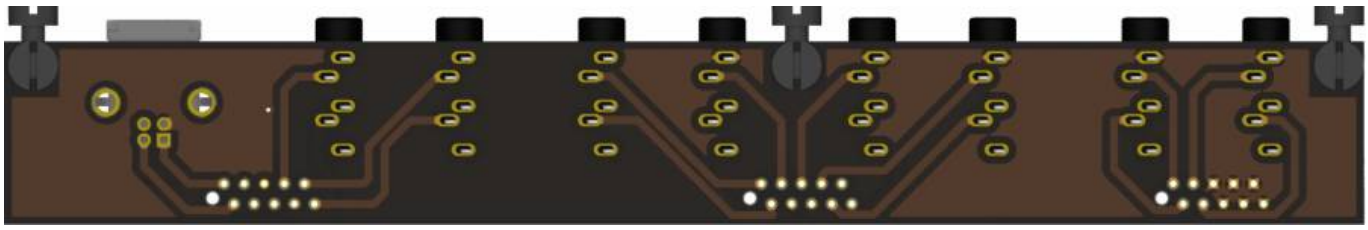

ON this board we have 3 micromatch Connectors, which are crimped fast on a cable
On the other side of the cable you have to solder directly to the Base-PCB,
be carefull while soldering - and follow the shematic, which is 3.5 Jack Midi Type B!

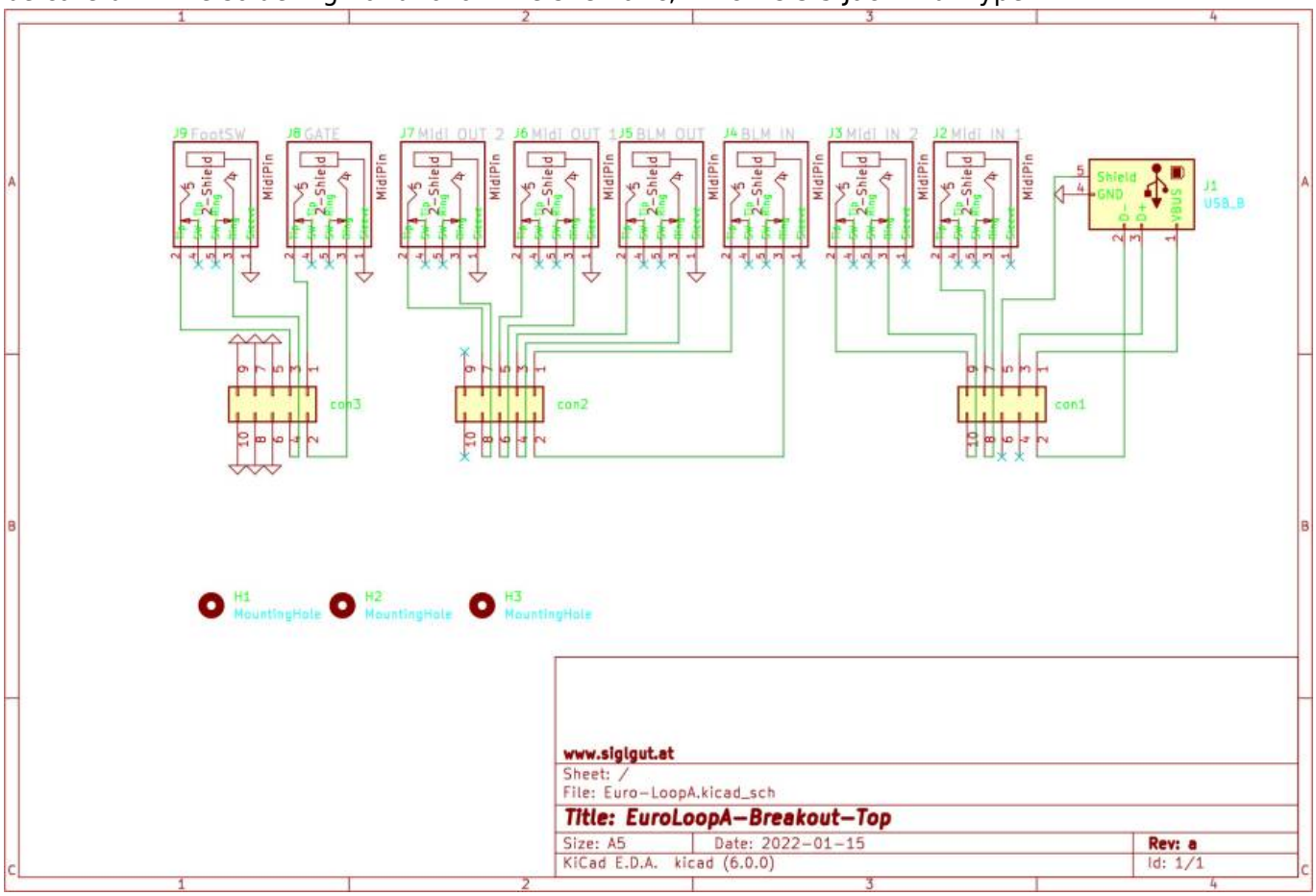

Schematic

Hardware Requirements

- midiphy LoopA caseless Kit
- Soldering Iron - with a Dip that can Handle Thruhole-Parts, solder Paste...
- The other Parts from the BOM

Building and BOM

All necessery is printet on the PCB, but also check the Shematic...

8x 1Row 7Pin headers (2.54mm pitch)

8x 1K 1208 SMD Resistors
12x 10uF 1208 Capacitors (non polarized)
3x 10K 0603 SMD Resistors which are optional

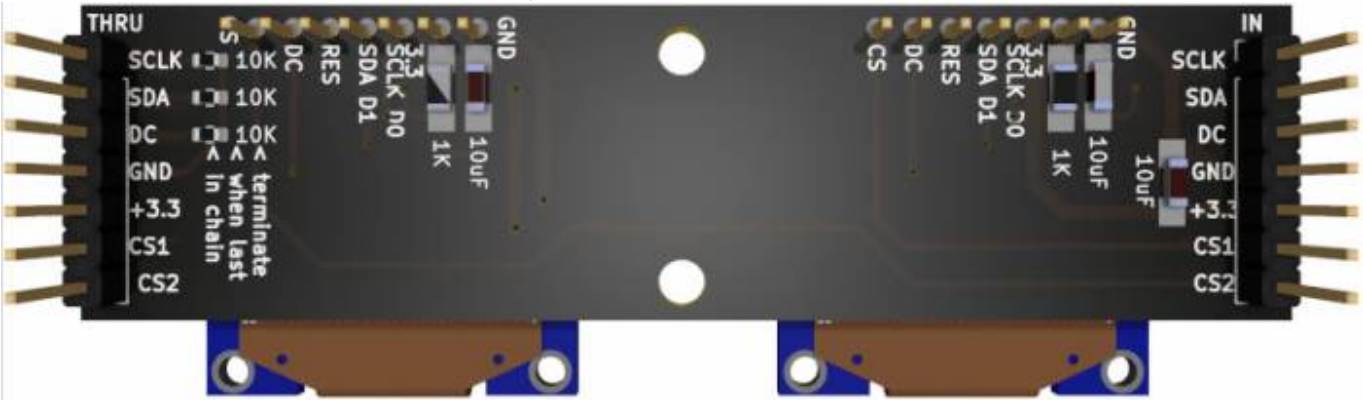

Frontpanel

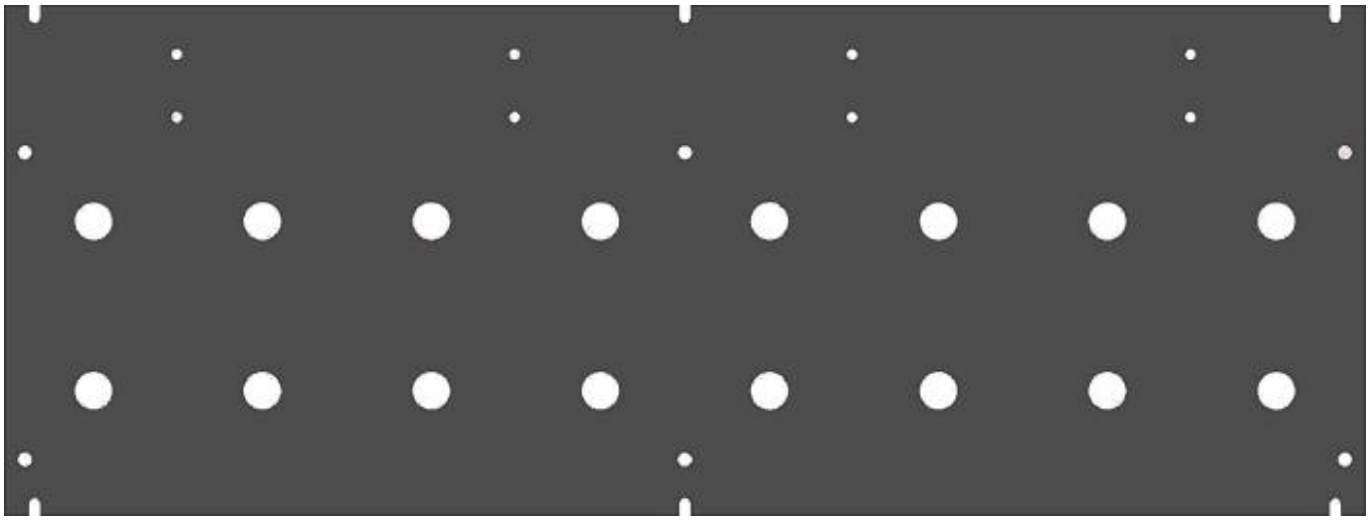

I made a DXF File which you can send to Formulor in Germany

i panalized it so there are 2 Plates in it
I payed 40€ summed for booth plates incl shipping from Germany to Austria
2xlre-oled-bar-dxf.zip

Recommend Material
3mm x 128.5 x 188.58 Aluminium, anodised)

To Do

waiting for the PCBs and Panels… since the Panels are reverse - engineered - its praying for good luck!

Community users working on it

- **Phatline** = PCB & Shematic, Documentation…

Just let a Private message on the forum to user already involved.

From:
https://www.midibox.org/dokuwiki/ - **MIDIbox**

Permanent link:
https://www.midibox.org/dokuwiki/doku.php?id=loopa-eurorack-panel&rev=1642319511

Last update: **2022/01/16 07:51**