LoopA - Eurorack - Frontpanel with breakout PCB

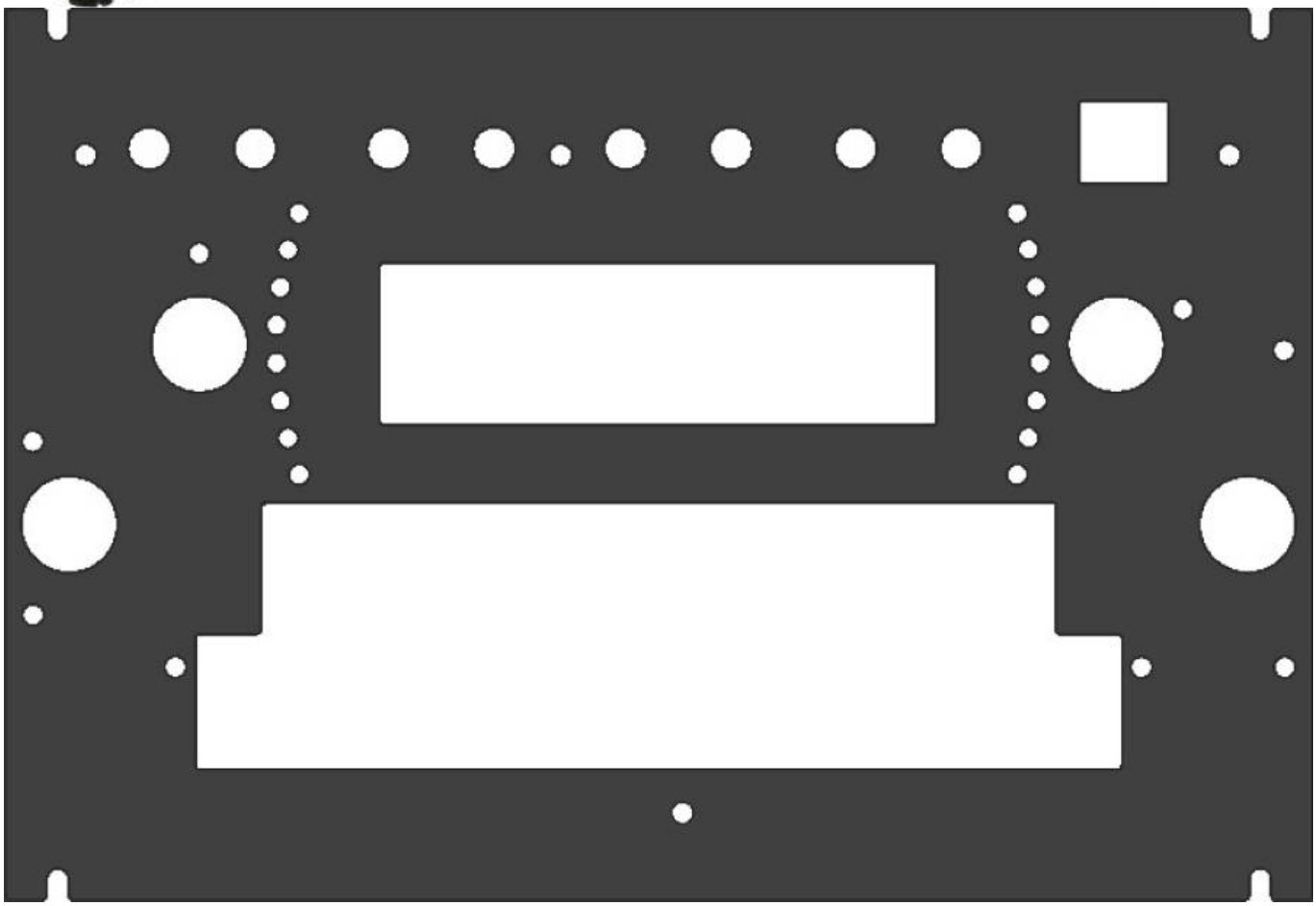

I made this Breakout-PCB and Frontpanel for the midiphy LoopA midiphy LoopA

PCB Size is 172x24mm
You have to decide if you want Midi Out 3 or the Gate OUT (space thing)
The Reset Switch and the SD, Card, are still on the base PCB...
If you want use the PCB you dont have place for the stock DIN Sockets!

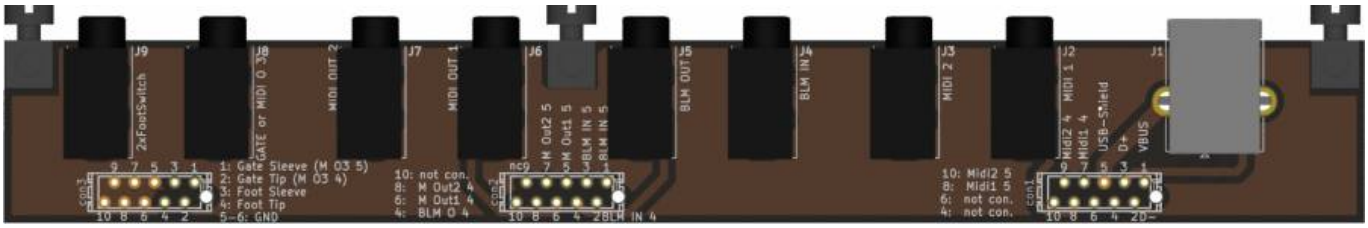

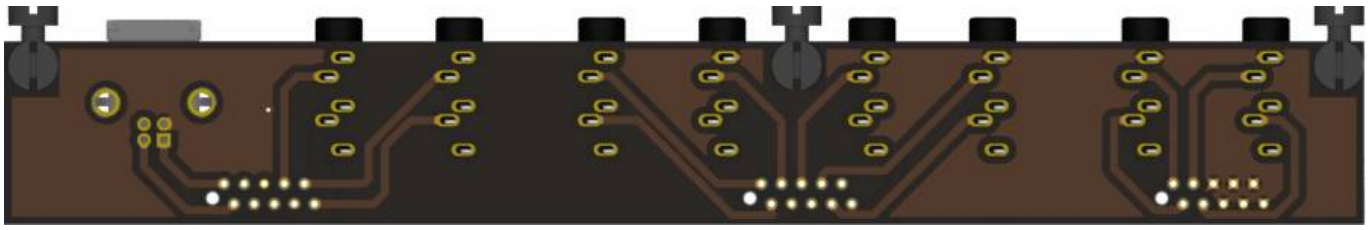

ON this board we have 3 micromatch Connectors, which are crimped fast on a cable
On the other side of the cable you have to solder directly to the Base-PCB,
be carefull while soldering - and follow the shematic, which is layout for 3.5 Jack Midi Type B!

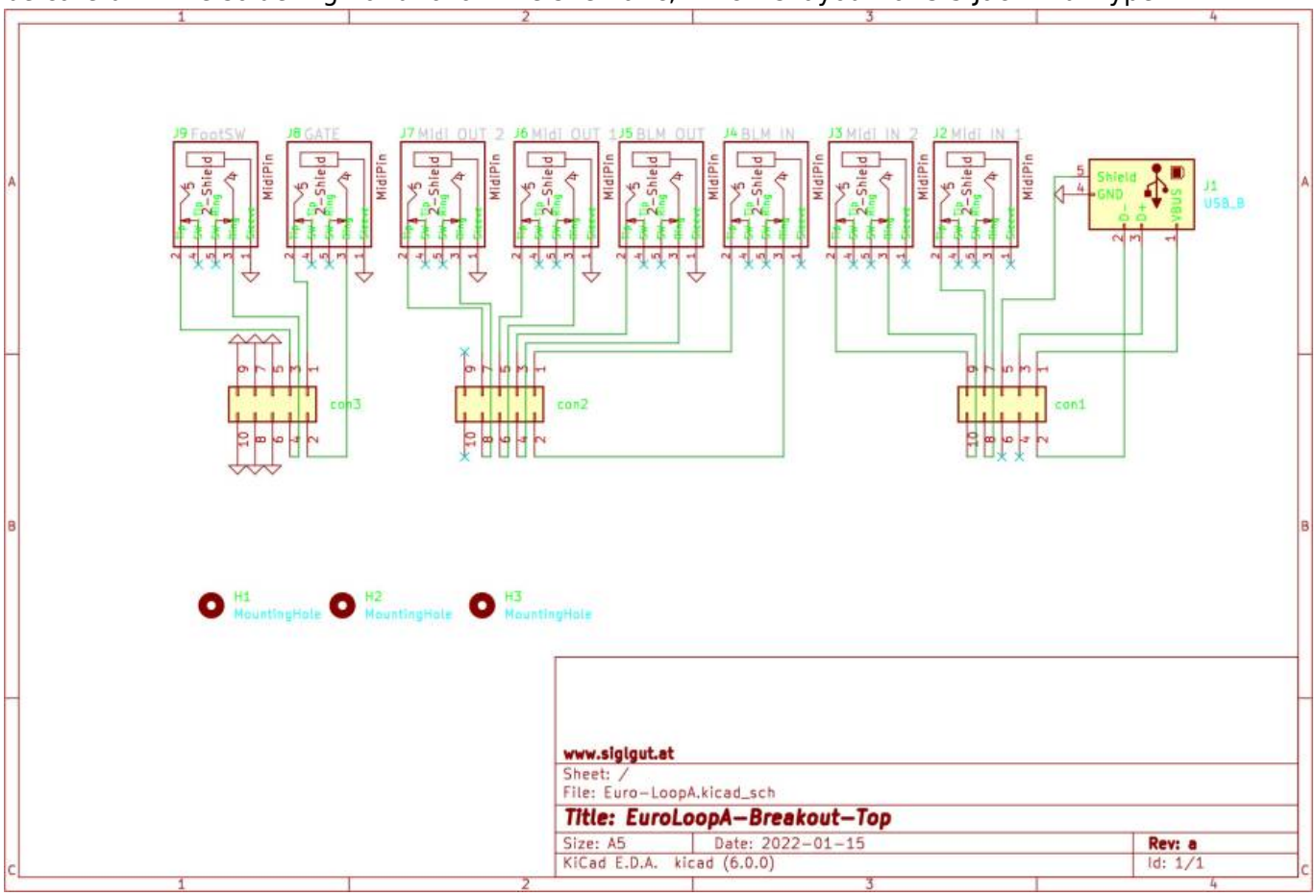

Schematic

Hardware Requirements

- midiphy LoopA caseless Kit
- Soldering Iron - with a Dip that can Handle Thruhole-Parts, solder Paste...
- The other Parts from the BOM

Building and BOM

All necessery Information is printet on the PCB, but also check the Shematic...

5x Leiterplatten Montageblock aka Standoffs

3x Micromatch Socket 2x5Pole 1,27mm
6x Micromatch Crimp Connector you need only 3, the 3+ is for fails by crimping
1x Flat Cable 1,27mm pitch
1x USB-Socket
8x 3,5 Audio Jack

And there will be some additional Fasting Material, like bolts, Screws, Standoffs, that i dont know right now, because the first protoype has to be built first...

Frontpanel

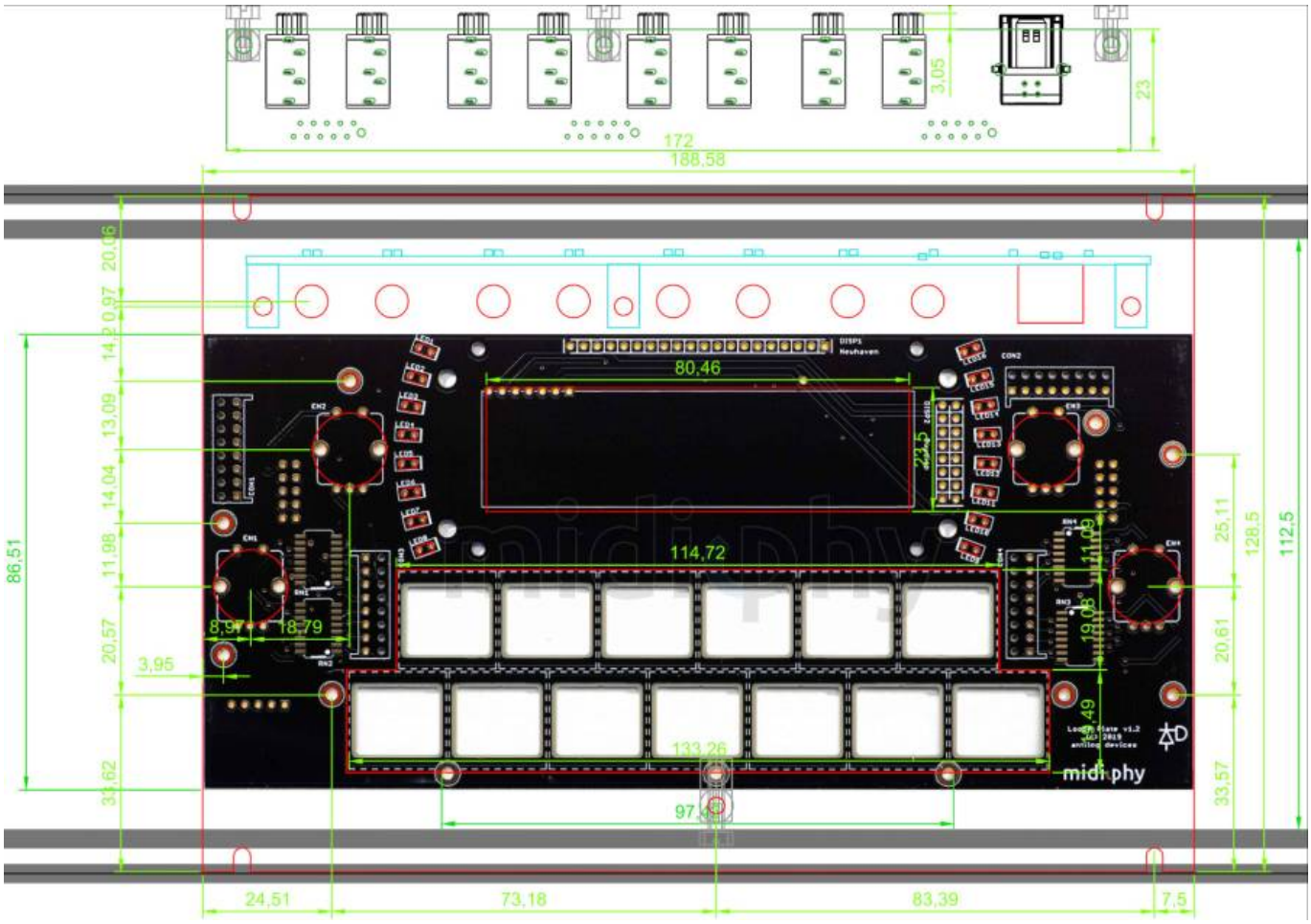

I made a DXF File which you can send to: (once the prototypestate is gone)
Formulor in Germany - Acrylic ... 2Pieces incl shipping 42€
frontpanels.de in germany my choose
The Beast - UK
Schaeffer-ag.de
Recommend Material
3mm x 128.5 x 188.58 Aluminium, anodised
contact frontpanels: info@frontpanels.de
frontpanels-euroloopa.zip - NOT TESTET - REVERSE ENGENEERING!!!!!!

To Do

waiting for the PCBs and Panels… since the Panels are reverse - engineered - its praying for good luck!

Community users working on it

- **Phatline** = PCB & Shematic, Documentation…

Just let a Private message on the forum to user already involved.

From:
https://www.midibox.org/dokuwiki/ - **MIDIbox**

Permanent link:
https://www.midibox.org/dokuwiki/doku.php?id=loopa-eurorack-panel&rev=1642323440

Last update: **2022/01/16 08:57**