MB-808-RE

Introduction

The MB-808-RE is a re-edit of TOMS/CONG and BD/SD drum parts of the Roland TR-808 to be controlled via MIDI or CV in a a Eurorack-designed panel.It's based upon the work done on MB-606RE Some Circuit Mods from around Web & time are included .

FrontPanel

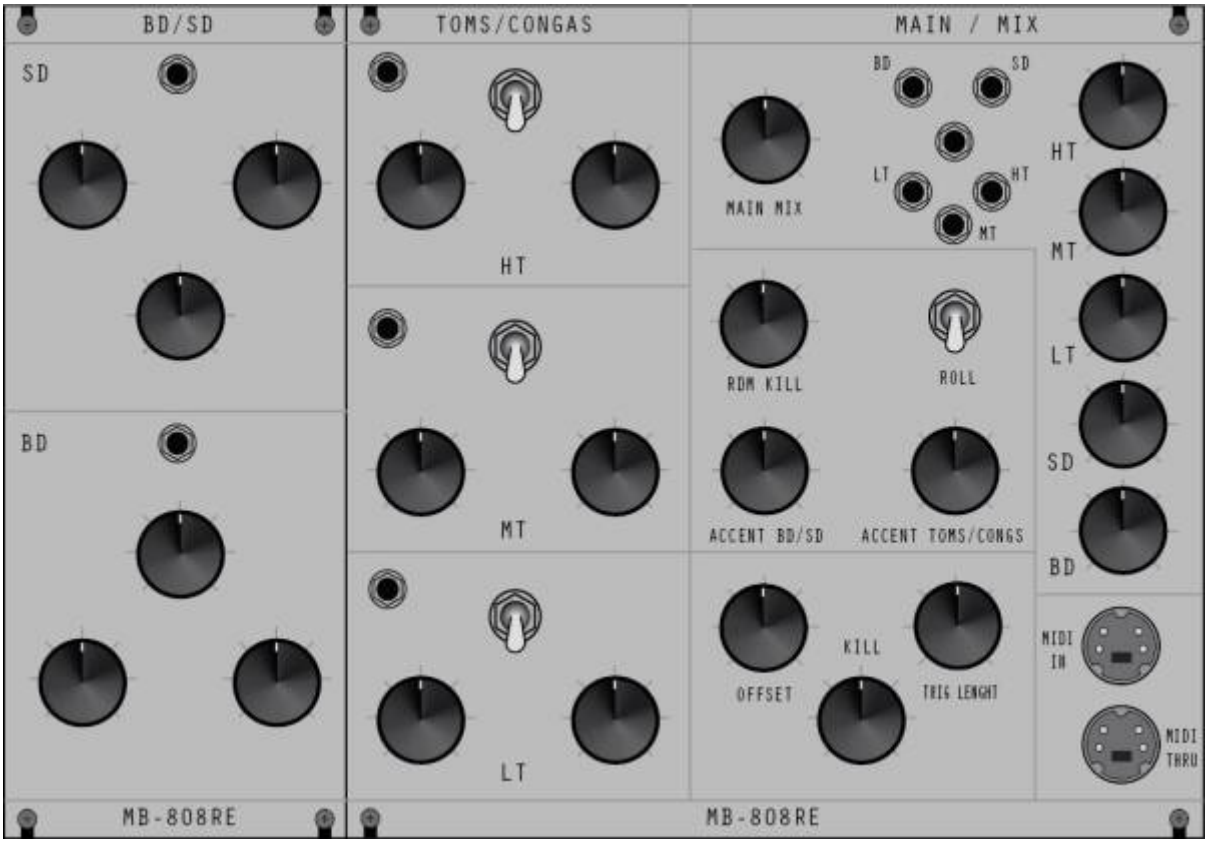

Community users working on it

- **Phatline** = BD+SD-PCB , BD+SD UI-PCB, AOUT_LC/5xTrigger/MIDI-CV In PCB,Program4Core
- **Psykhaze** = AOUT_LC/5xTrigger/MIDI-CV In PCB, TOMS/CONG PCB, Main UI PCB, Alu Plates Sourcing & Design

Getting Involved ?

Just let a Private message on the forum to users already involved

Original Schematics

Global

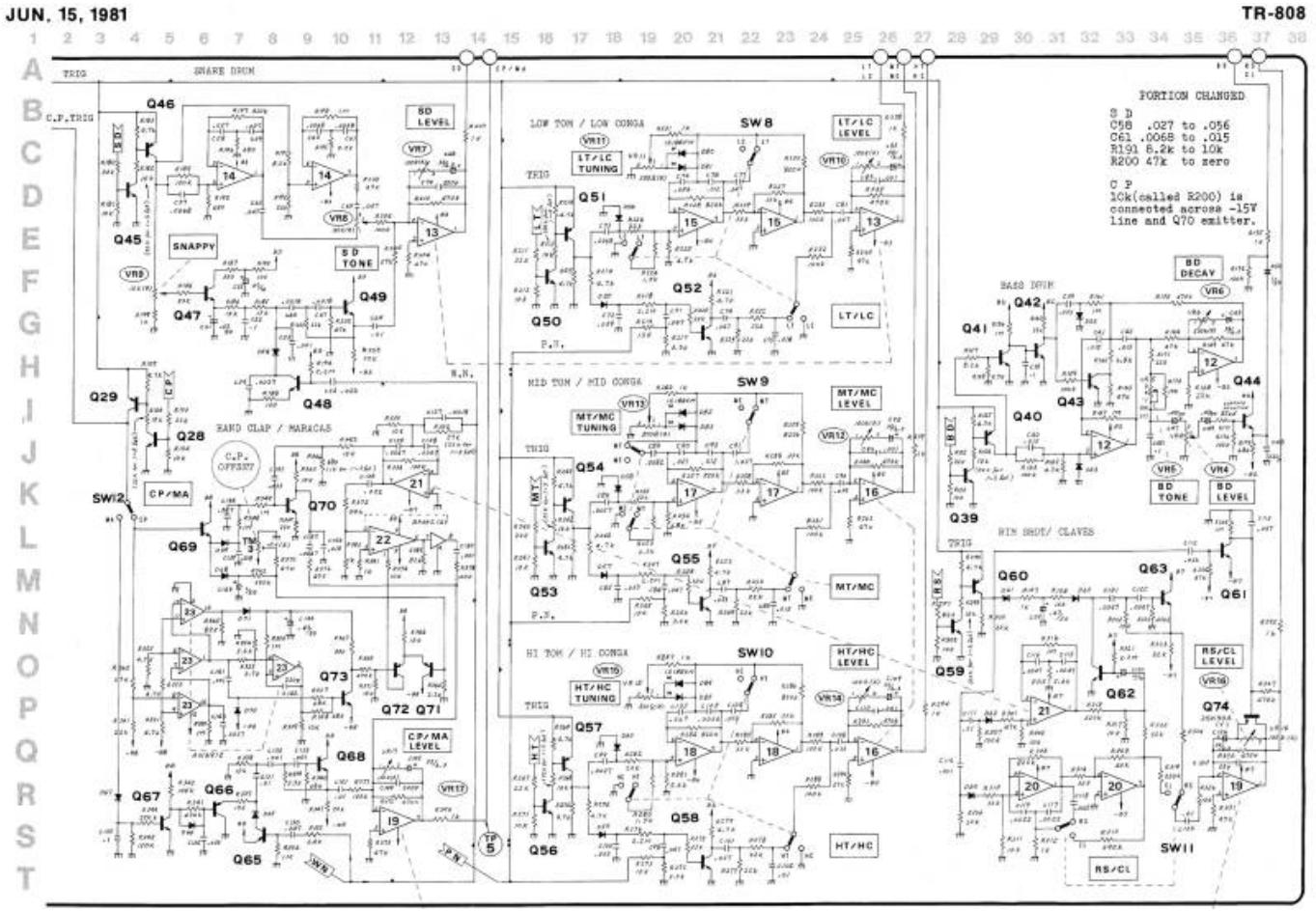

BD/SD

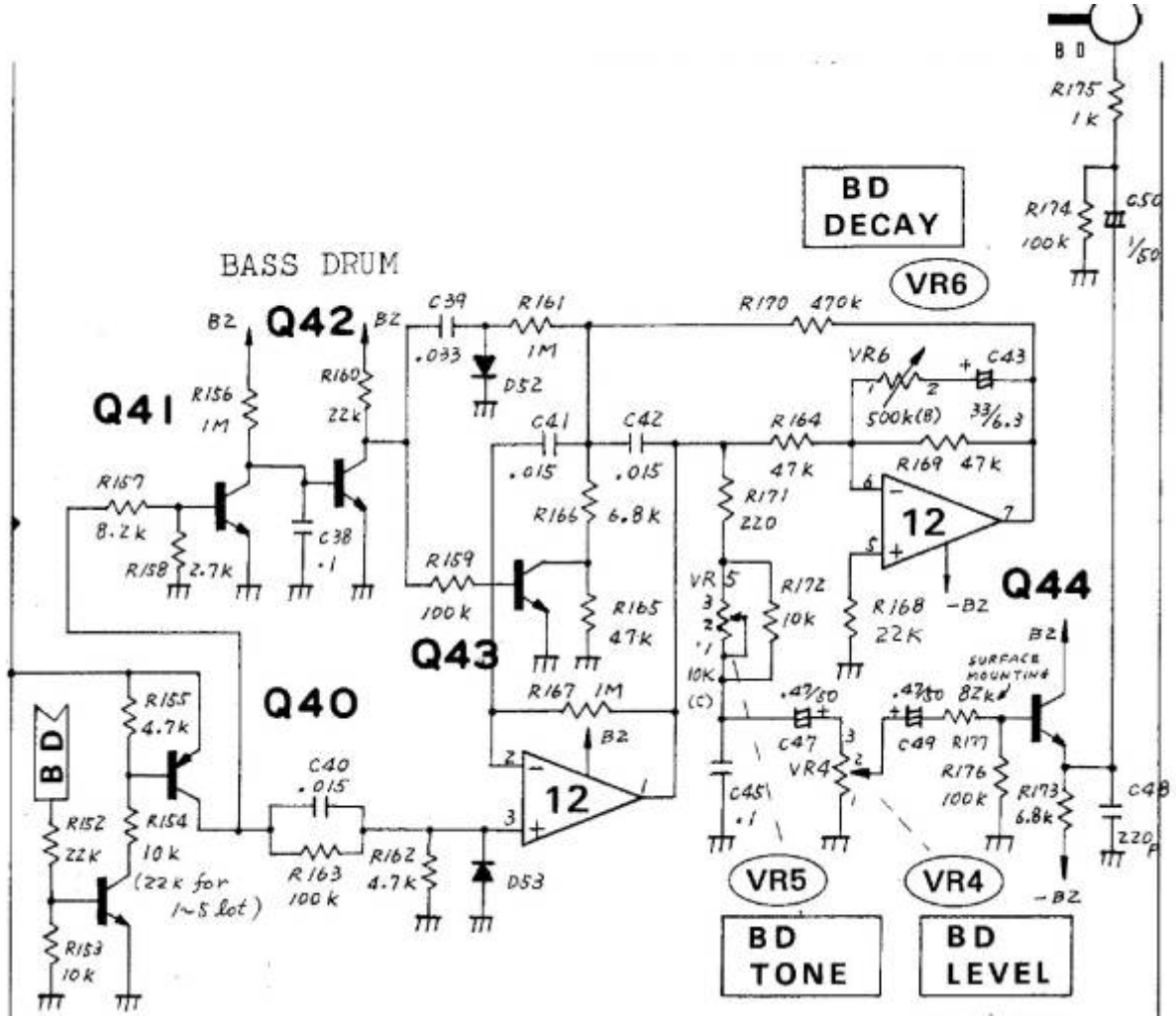
BASS DRUM
BD
R175 1k
BD DECAY
R174 100k
C50 1/50
VR6
Q42
Q41
Q43
Q40
Q44
B2
-B2
C39 .033
R161 1M
D52
R170 470k
VR6 500k(B)
C43 33/6.3
R156 1M
R160 22k
C41 .015
C42 .015
R164 47k
R169 47k
R157 8.2k
R158 2.7k
C38 .1
R166 6.8k
R171 220
12
R159 100k
R165 47k
VR5 10K
R172 10k
R168 22K
R167 1M
SURFACE MOUNTING
R155 4.7k
C40 .015
C47 .47/50
C49 .47/50
R177 82k
C45 .1
VR4
R176 100k
R173 6.8k
C48 220P
R152 22k
R154 10k
(22k for 1~5 lot)
R153 10k
R163 100k
R162 4.7k
D53
VR5
VR4
BD TONE
BD LEVEL

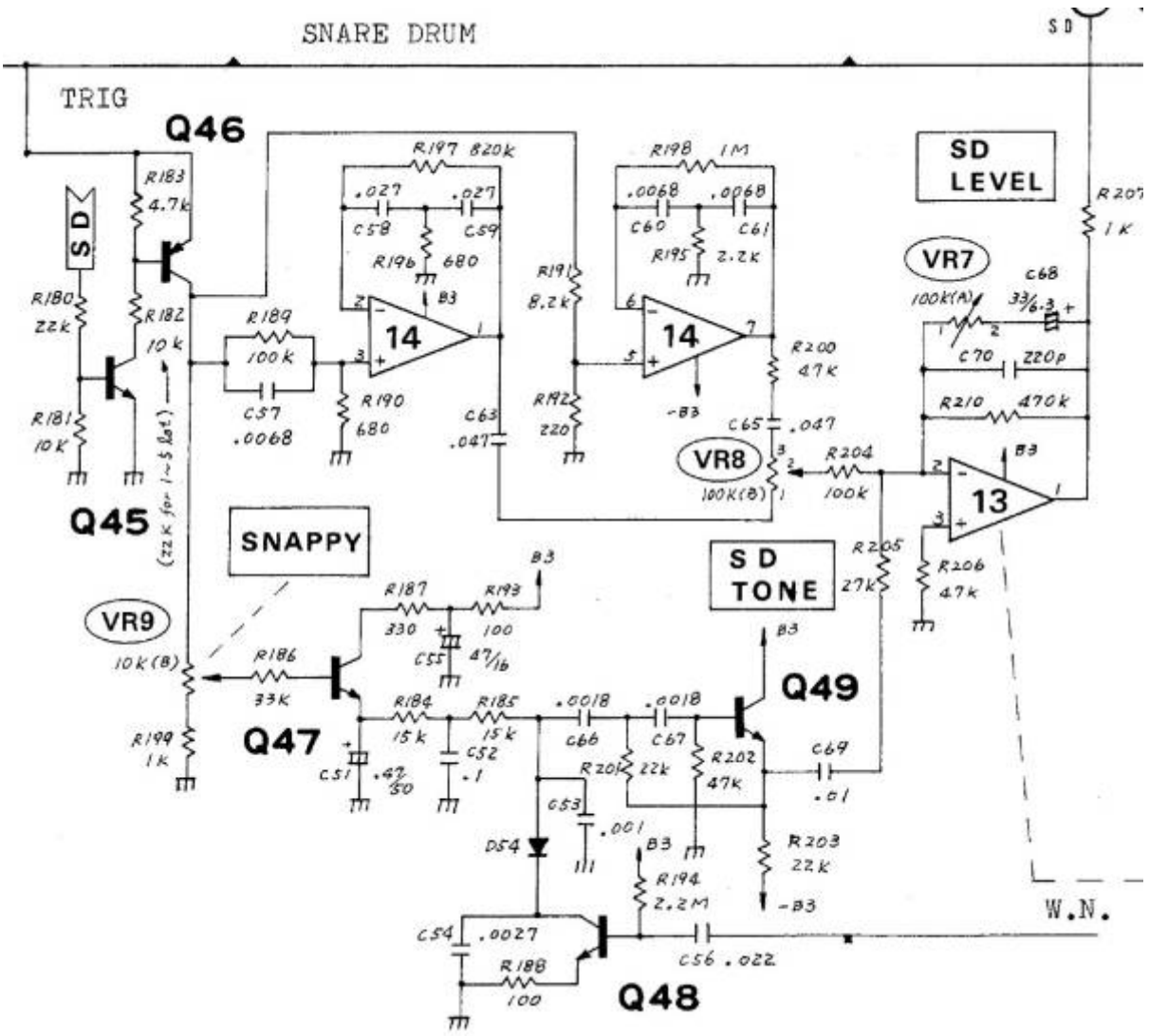
SNARE DRUM
SD
TRIG
Q46
R183 4.7k
SD
R180 22k
R182 10k
R181 10k
Q45
(22K for 1~5 Set)
R189 100k
C57 .0068
R190 680
R197 820k
.027
.027
C58
C59
R196 680
14
B3
R191 8.2k
R192 220
R198 1M
.0068
.0068
C60
C61
R195 2.2k
14
-B3
C63 .047
C65 .047
R200 47k
SD LEVEL
R207 1K
VR7
100K(A)
C68 33/6.3
C70 220p
R210 470k
VR8
100K(B)
R204 100k
13
B3
R205 27k
R206 47k
SNAPPY
SD TONE
VR9
10K(B)
R186 33K
R187 330
R193 100
C55 47/16
B3
Q47
R184 15k
R185 15k
C52 .1
C51 .47/50
.0018
.0018
C66
C67
R201 22k
R202 47k
C69 .01
Q49
B3
C53 .001
D54
R203 22k
R194 2.2M
-B3
W.N.
C54 .0027
R188 100
C56 .022
Q48

Toms/Congas

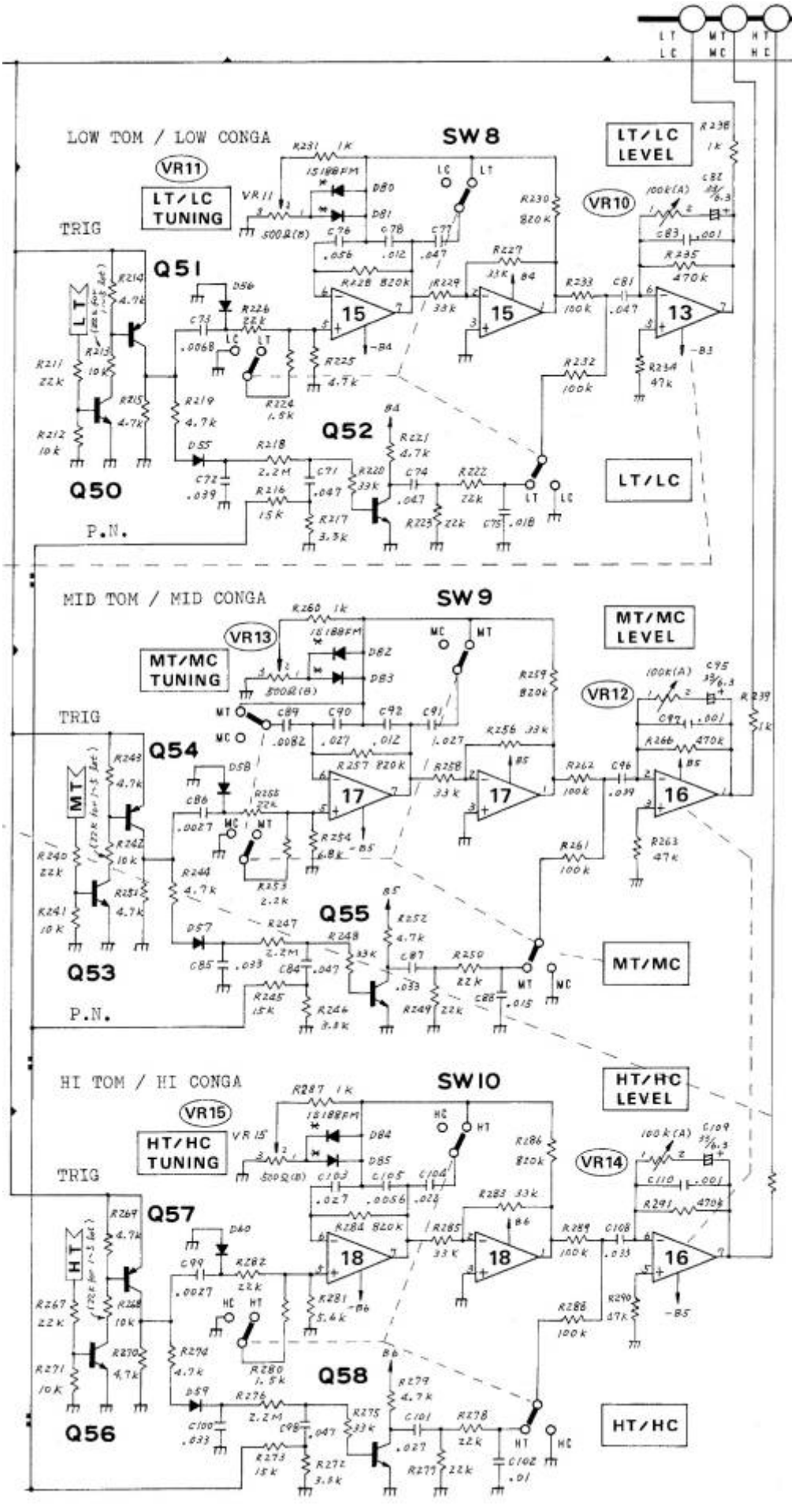
LT LC
MT MC
HT HC
LOW TOM / LOW CONGA
SW 8
VR11
LT/LC TUNING
LT/LC LEVEL
VR10
TRIG
Q51
Q52
Q50
LT/LC
P.N.
MID TOM / MID CONGA
SW 9
VR13
MT/MC TUNING
MT/MC LEVEL
VR12
TRIG
Q54
Q55
Q53
MT/MC
P.N.
HI TOM / HI CONGA
SW10
VR15
HT/HC TUNING
HT/HC LEVEL
VR14
TRIG
Q57
Q58
Q56
HT/HC

From:
https://www.midibox.org/dokuwiki/ - **MIDIbox**

Permanent link:
https://www.midibox.org/dokuwiki/doku.php?id=mb-808re&rev=1467599657

Last update: **2016/07/04 02:34**