MB-808-RE

Introduction

The MB-808-RE is a re-edit of TOMS/CONG and BD/SD drum parts of the Roland TR-808 to be controlled via MIDI or CV in a a Eurorack-designed panel.It's based upon the work done on MB-606RE Some Circuit Mods from around Web & time are included .

FrontPanel

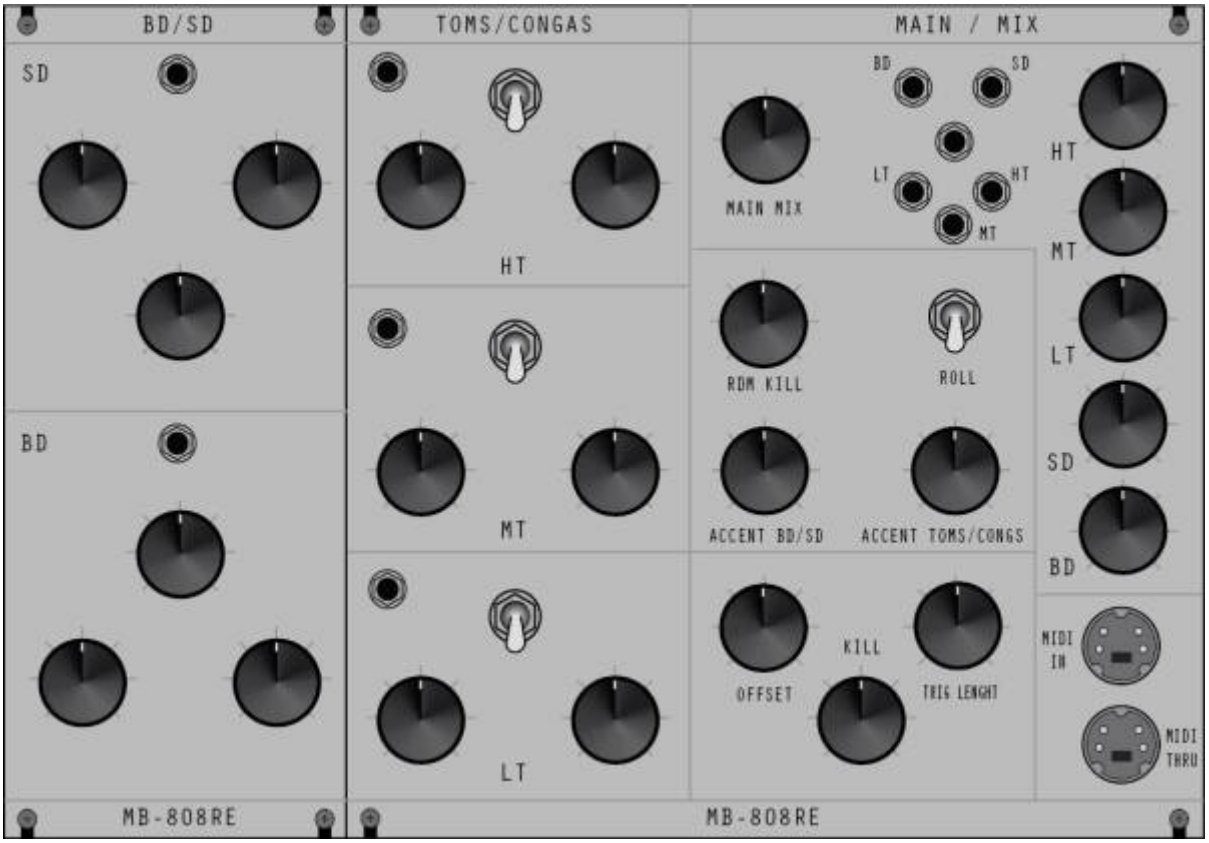

Community users working on it

- **Phatline** = BD+SD-PCB , BD+SD UI-PCB, AOUT_LC/5xTrigger/MIDI-CV In PCB,Program4Core
- **Psykhaze** = AOUT_LC/5xTrigger/MIDI-CV In PCB, TOMS/CONG PCB, Main UI PCB, Alu Plates Sourcing & Design

Getting Involved ?

Just let a Private message on the forum to users already involved

Original Schematics

Global

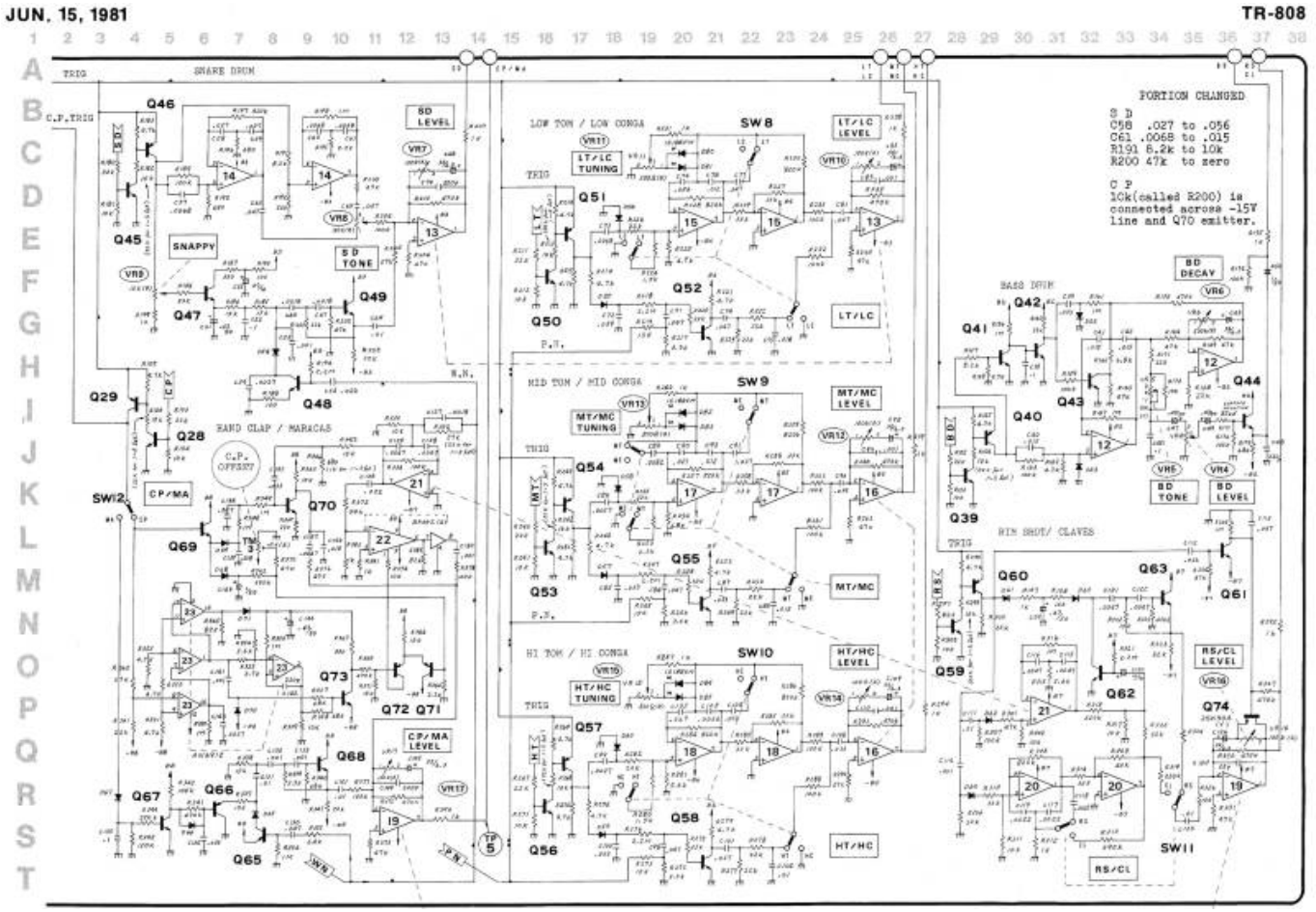

BD/SD

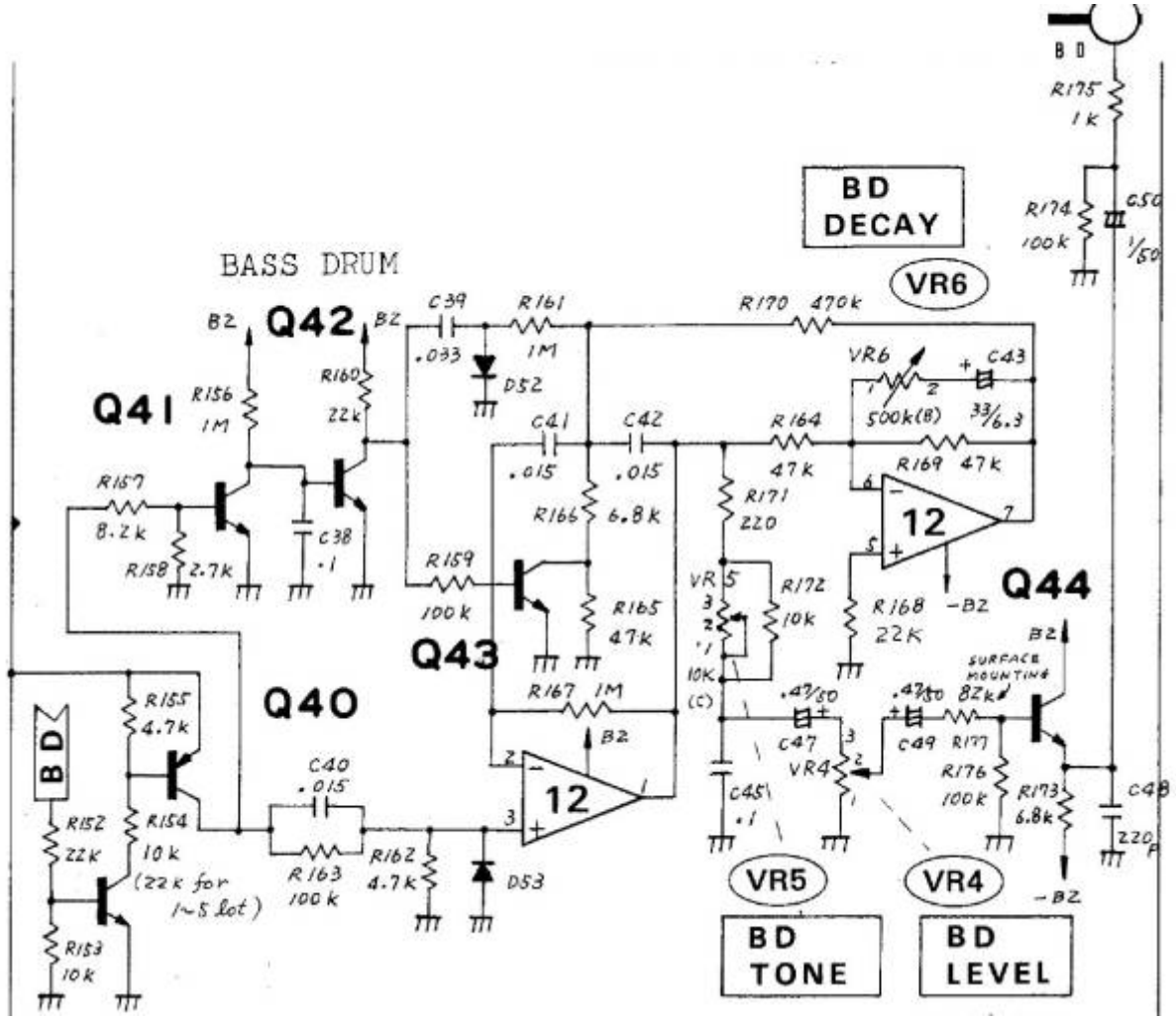
BASS DRUM
BD
R175 1k
BD DECAY
R174 100k
C50 1/50
VR6
Q42
Q41
Q40
Q43
Q44
B2
C39 .033
R161 1M
D52
R170 470k
VR6 500k(B)
C43 33/6.3
R156 1M
R160 22k
C41 .015
C42 .015
R164 47k
R169 47k
R157 8.2k
R158 2.7k
C38 .1
R166 6.8k
R171 220
12
R159 100k
R165 47k
VR 10K
R172 10k
R168 22K
-B2
R167 1M
SURFACE MOUNTING
R155 4.7k
C40 .015
C47 .47/50
C49 .47/50
R177 82k
C45 .1
VR4
R176 100k
R173 6.8k
C48 220P
R152 22k
R154 10k
(22k for 1~5 lot)
R153 10k
R163 100k
R162 4.7k
D53
VR5
VR4
BD TONE
BD LEVEL

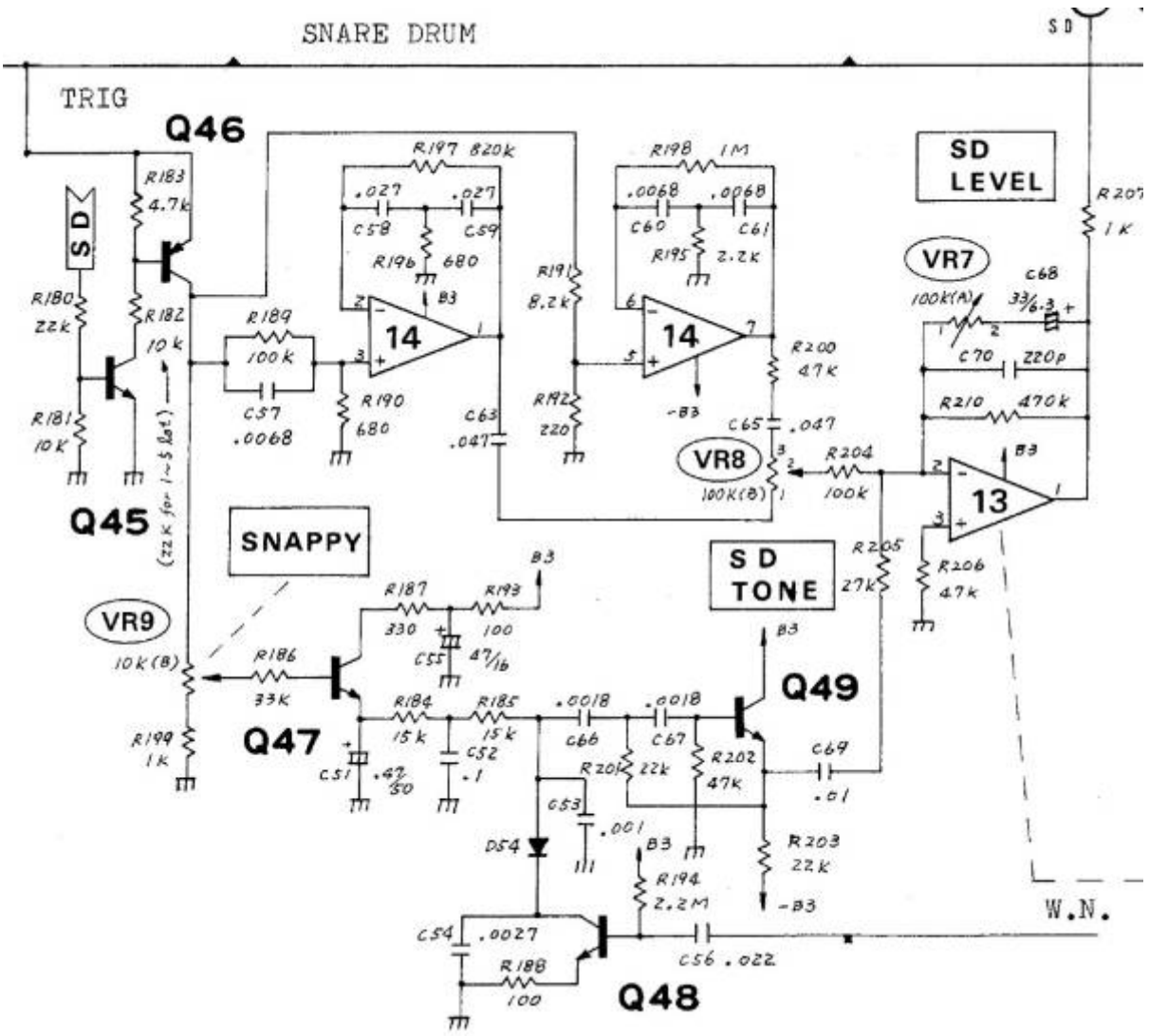
SNARE DRUM
SD
TRIG
Q46
R183 4.7k
SD
R180 22k
R182 10k
R181 10k
Q45
(22K for 1~5 Set)
R189 100k
C57 .0068
R190 680
R197 820k
.027
.027
C58
C59
R196 680
14
B3
R191 8.2k
R192 220
C63 .047
R198 1M
.0068
.0068
C60
C61
R195 2.2k
14
-B3
R200 47k
C65 .047
VR8
100K(B)
R204 100k
SD LEVEL
R207 1K
VR7
100K(A)
C68 33/6.3
C70 220p
R210 470k
13
B3
R205 27k
R206 47k
SNAPPY
S D TONE
VR9
10K(B)
R186 33K
R187 330
R193 100
C55 47/16
B3
Q47
R184 15k
R185 15k
C52 .1
C51 .47/50
.0018
.0018
C66
C67
R201 22k
R202 47k
C69 .01
Q49
C53 .001
D54
B3
R194 2.2M
R203 22k
-B3
W.N.
C54 .0027
R188 100
C56 .022
Q48
R199 1K

Toms/Congas

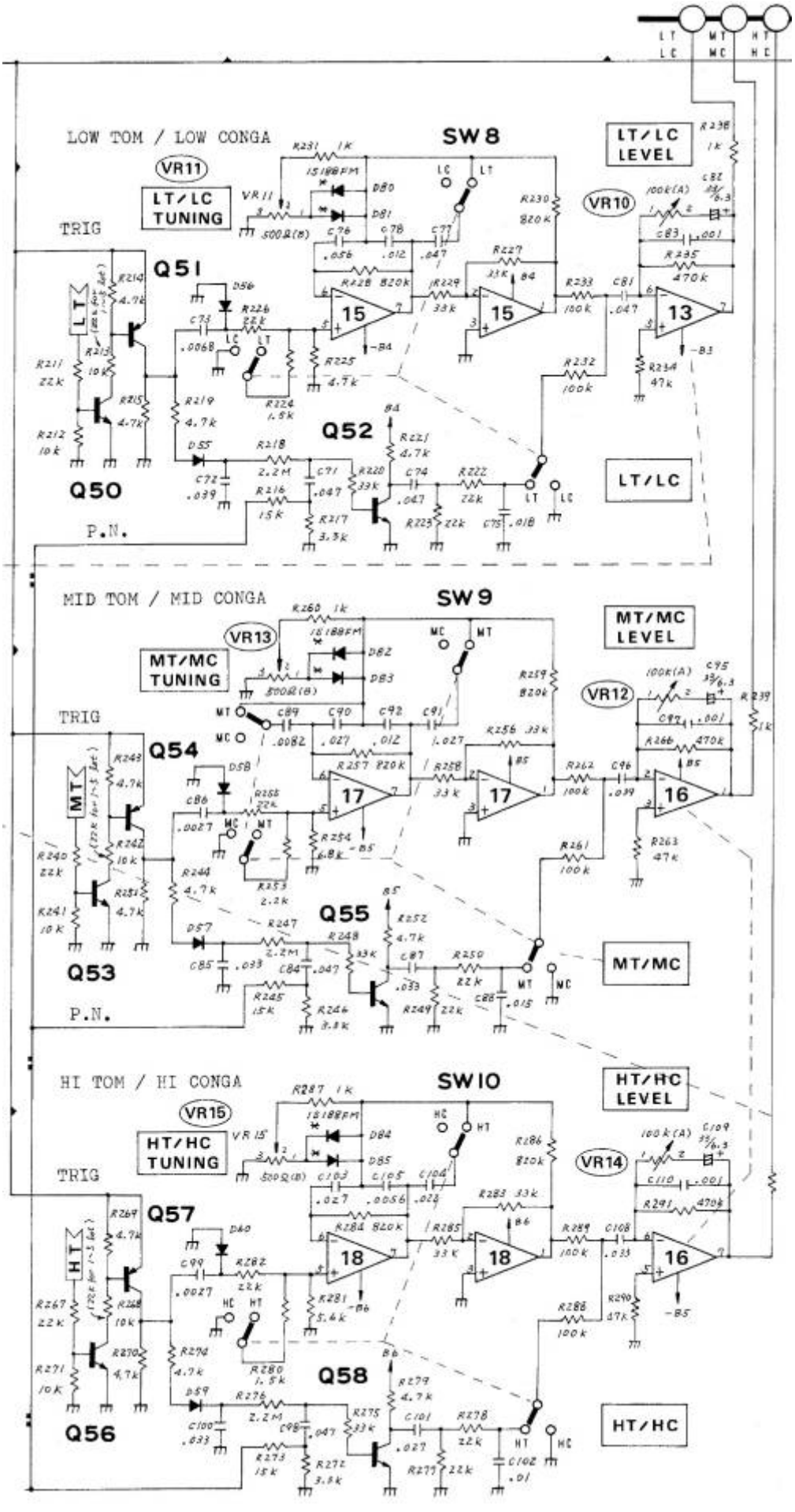
LT
LC
MT
MC
HT
HC
LOW TOM / LOW CONGA
SW 8
LT/LC LEVEL
VR11
LT/LC TUNING
VR10
TRIG
Q51
Q52
Q50
LT/LC
P.N.
MID TOM / MID CONGA
SW 9
MT/MC LEVEL
VR13
MT/MC TUNING
VR12
TRIG
Q54
Q55
Q53
MT/MC
P.N.
HI TOM / HI CONGA
SW10
HT/HC LEVEL
VR15
HT/HC TUNING
VR14
TRIG
Q57
Q58
Q56
HT/HC

Mods

*From **Stereoping***

The famous TR808-BD is quite perfect, not much to alter or improve.

changed R170 (470k) to resistor (380k) with a trimmer (100k) in series for adjustment of longest possible decay put an analog switch between decay-pot and C43 to switch between 2 different decays. The sequencers BD-steps have 3 states which are rotated each time you press the step-button: OFF with LED off, ON with LED on and variable decay (from the pot), ON with LED flashing and fixed short decay. Of course the short BD cuts off the long. Snaredrum

The snare consists of 3 elements: 2 t-bridge-oscillators and white noise going through a simple vca with a simple envelope for the noise-sound.

Tune for lower oscillator – R116 is replaced with 1M-Pot and 220k in series. The lower oscillator can be tuned then. The 220k will prevent bad sound in extreme potpositions. You also can take 2.2 MB-pot but beyond the 1M there wont happen too much. Noisefilter – R22 is replaced by 50k-Pot and 4.7k in series. Again the 4.7k prevents weird sounds. Noisedecay – i put a 10k-pot in parallel to C37. It is not the badest idea to have a socket for C37. Now you can replace it with different values for testing what you like most without soldering. To high values (>2,2µ) will result in slow loading time, you would loose the punchy attack TR606-pitch envelope for both oscillators just copied the tr606-SD-scheme 2 times, one for each oscillator the TR606-pitch envelope – when used – tunes the already hightuned oscillator 1 even higher. I changed C32/C33 (6.8n) into 10n and put some sockets for experimenting with different capacitor values witout the need for soldering. after building the noiseunit i was not happy with the sound. no matter how this 20k-pot was set, the white noise somehow sounded ‘granular’, not white. I changed the 100k-resistor at the opamp-input (R280) into a 5k-pot, much better now.

From:
https://www.midibox.org/dokuwiki/ - **MIDIbox**

Permanent link:
https://www.midibox.org/dokuwiki/doku.php?id=mb-808re&rev=1467601169

Last update: **2016/07/04 02:59**