MIDIbox 2069

A Module based on Korg Music Voicing System NJM2069.

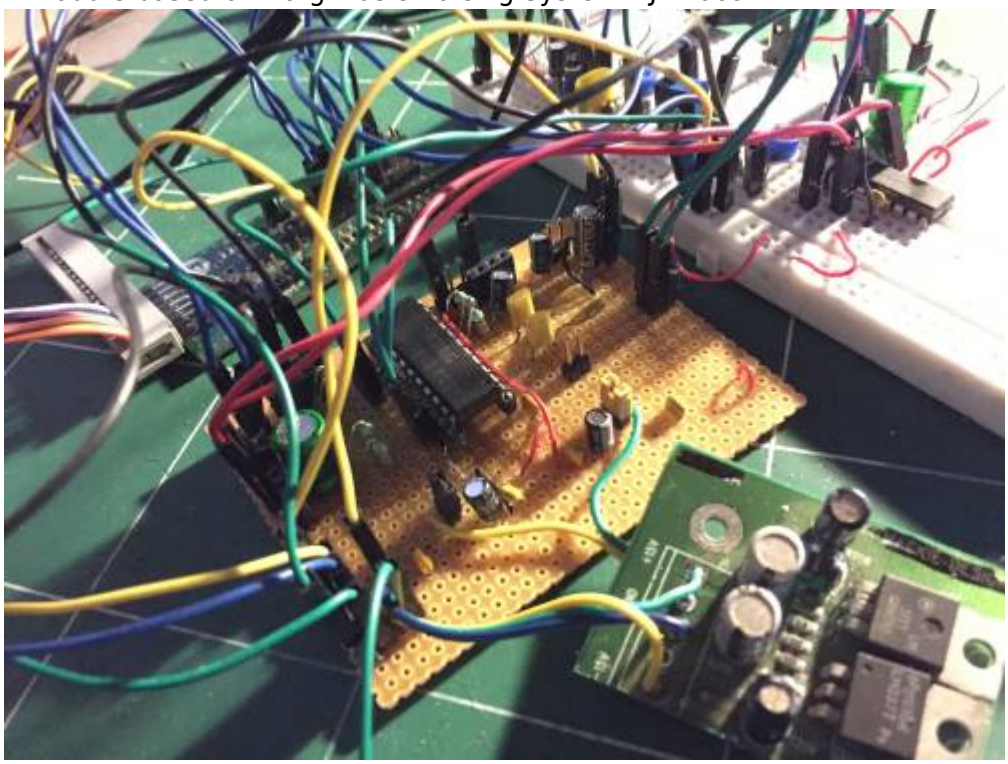

The IC NJM2069

First some words about the chip.



Some of you already know it. It's present in some KORG products from the 80s, in Analog Hybrid

Synths like the DW and EX series, DW-6000, DW-8000, and the Poly800…





You can find it too in Some samplers of the same brand, in the DSS-1 for example.




The NJM2069 is Music Voicing System, like SSM brand used to say.
Supply is a dual rail **+/-5V**.
Very close to the SSM2045, same functions but not the same tech. It's an OTA based LPF but it's not only a filter.
It is composed of **4 VCA** and **1 VCF** Low Pass 4 Poles.

2 VCA are fixed on the VCF inputs named SIG1 and SIG2. 1 is internally used for the Resonance. The last VCA if fully independent.

The VCF part has **3 Inputs**:

- **Signal 1 In** with VCA
- **Signal 2 In** with VCA
- **VCF Signal In** direct VCF Input

2 Outputs:

- **2P Out** VCF -12dB/Oct Output
- **4P Out** VCF -24dB/Oct Output

and **5 CV Inputs**:

- **SIG1 Level**
- **SIG2 Level**
- **Freq Log**
- **Freq Lin**
- **Resonance**

The Independent VCA Has is own input/output and 2 CV inputs.
First is linear CV.
The other is labelled Log in some version and seems to be a bias on another and is finally not usable, i think.
Here the function diagram and pinout.

NJM2069
BLOCK DIAGRAM AND PIN CONFIGURATION

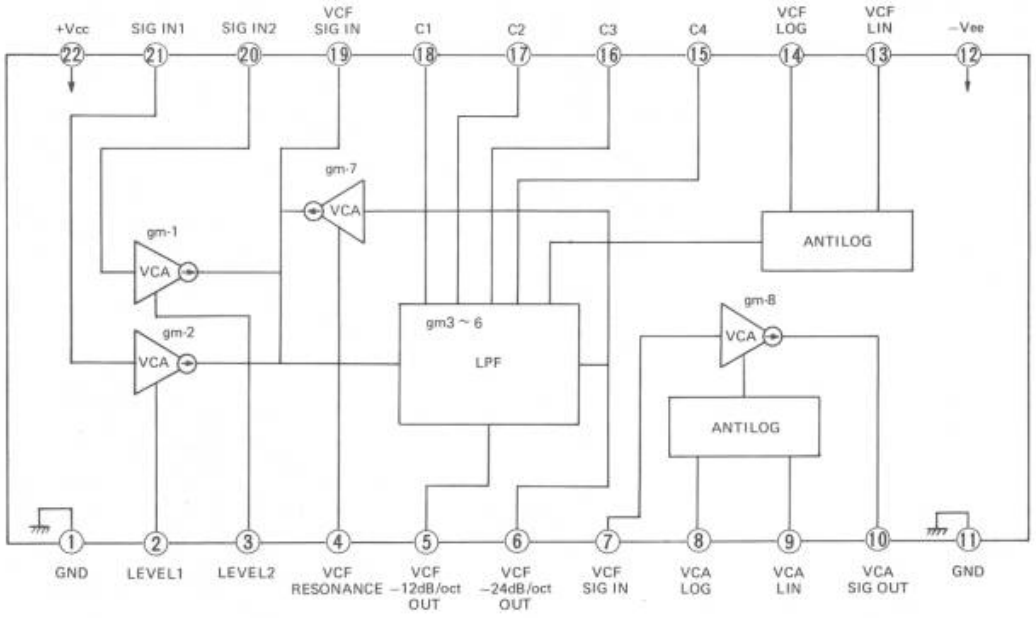

-31-

I didn't find too much documentation, no datasheet. And some written information on the internet are wrong.
For example i read somewhere that the chip is not able to self oscillate! It's wrong! Mine on a bread board do it very well ;)
Not too much data then i used the service manual of the Poly-800, DW-8000 and DSS-1 to prototype my board. And after some testing, analyze... Finally design a first PCB version.
DDS-1 Service Manual
DW-8000 Service Manual
Poly-800 Service Manual

Now let's prototype it!



I used Poly-800 Service Manual page 6:

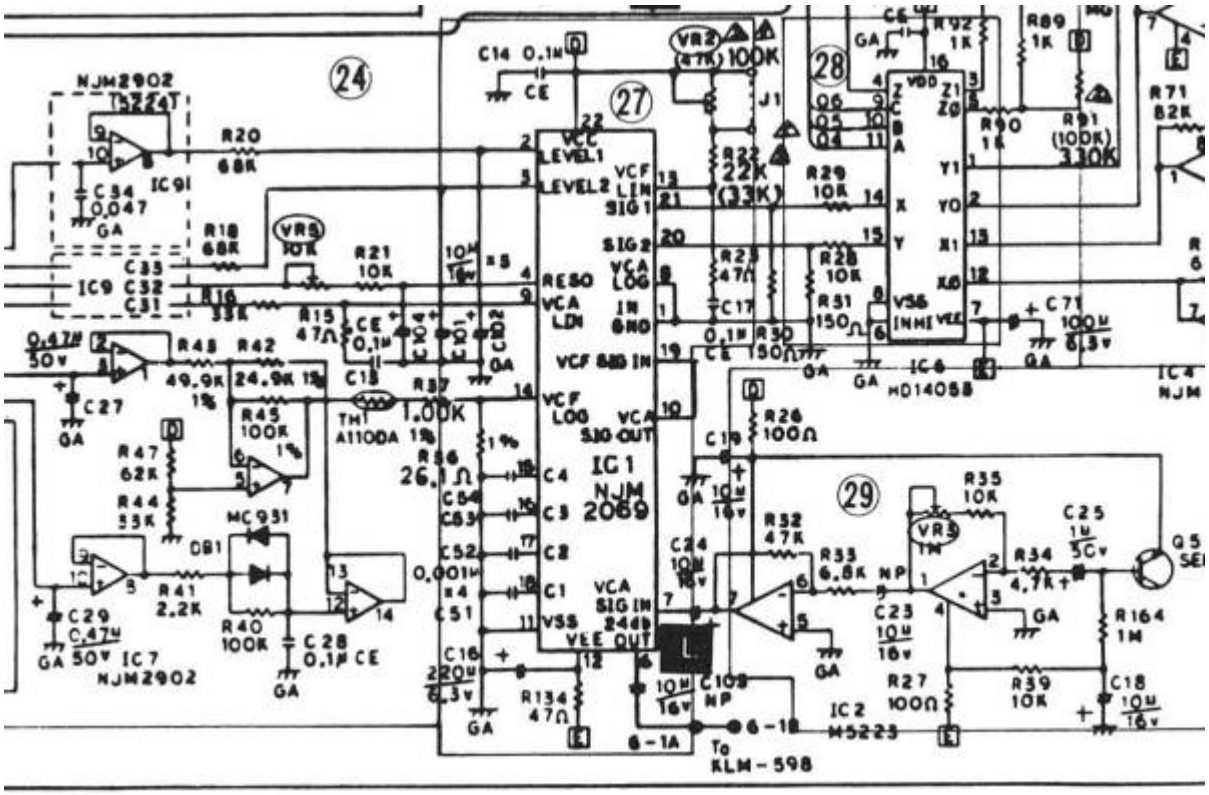

In the Poly and EX-800 the 2069 is in **PRE** configuration.
It means the VCA is before the VCF. The VCF has 3 Voltage controlled inputs, SIG1, SIG2 and VCF In.
Two VCO on SIG1 and SIG2 and a noise circuit is applied to the VCA In.
The VCF 4 Poles output is the Output of the filter stage.

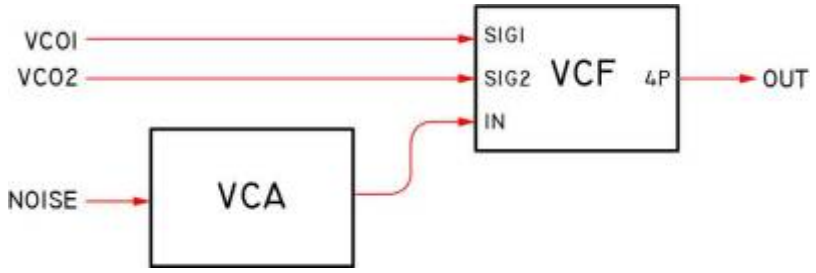

The DW-8000 Service Manual page 22:

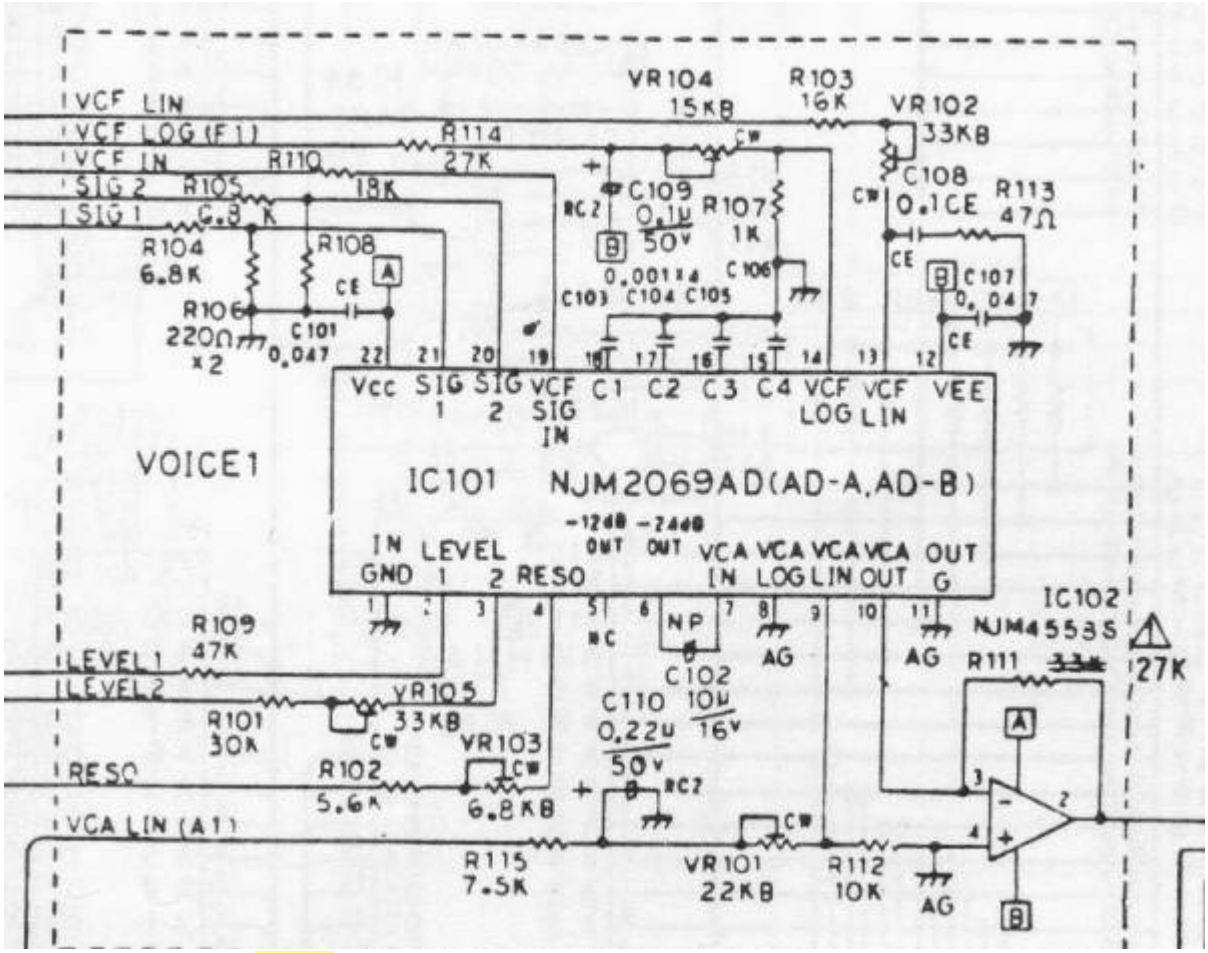

The DW-8000 is in **POST** config.
The VCA is after the VCF Two VCO come to SIG1 and SIG2.
The Noise Circuit is directly applied to VCF In.
The VCA Input connected to the VCF 4 poles output.
The VCA Output is the output of the filter stage.

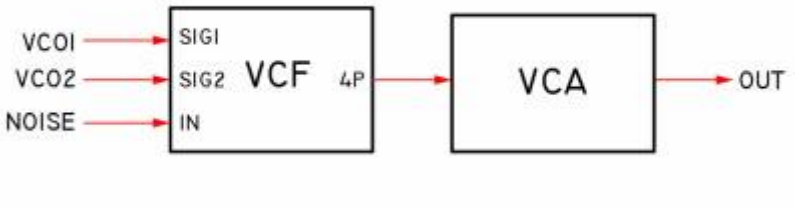

The DSS-1 Service Manual page 18:

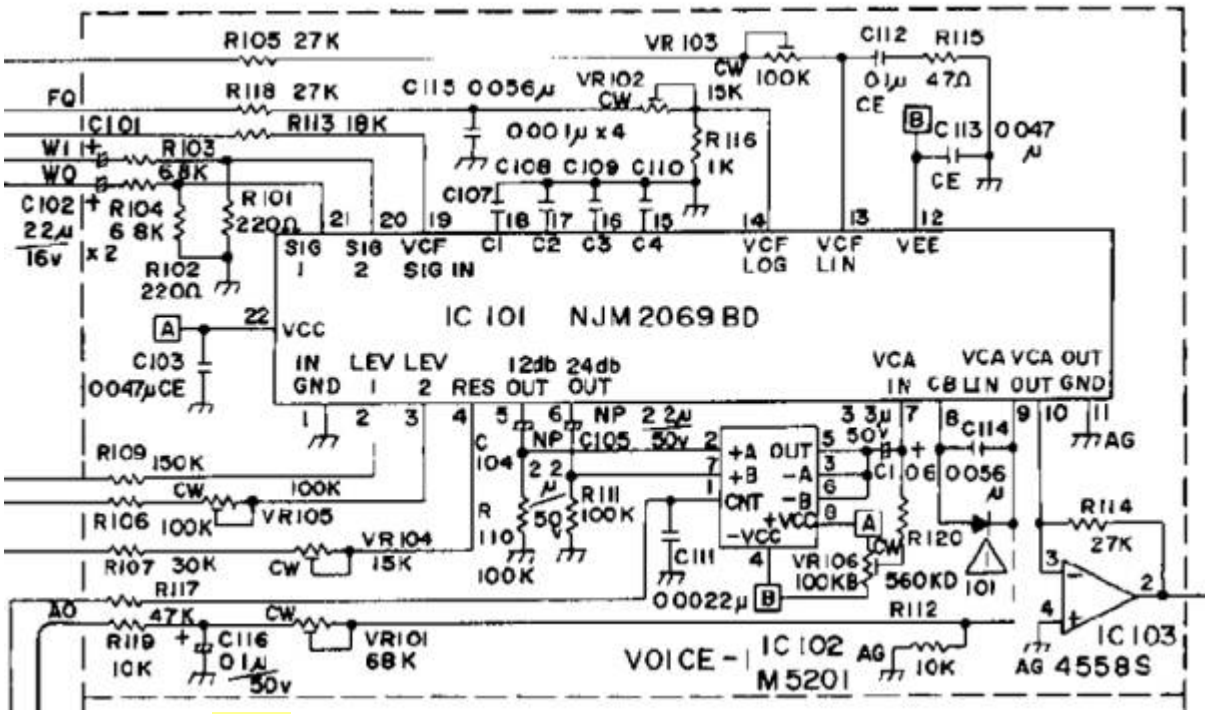

The DSS-1 is in **POST** config too.
The only difference is the 2 switching Op Amp added between the VCF Ouputs 2P/4P and the VCA In.

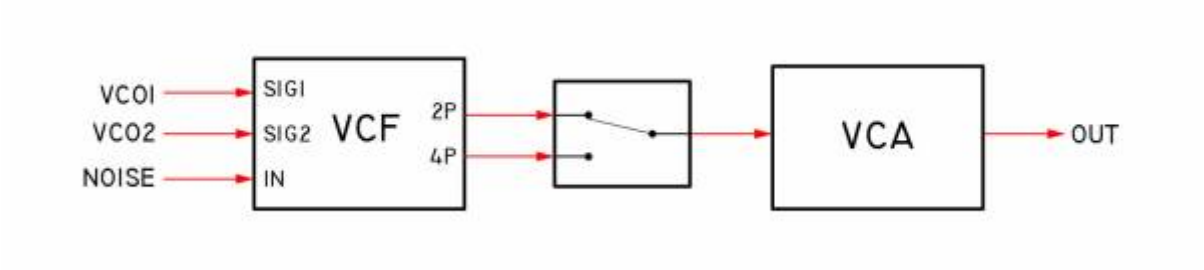

Specifications

- Digital and Analog control for all CV, both at the same time.
- Configuration modes are controllable.
- A controllable Bypass.
- Power supply is +/-12V.
- Can be use in a desktop synth or in a Modular system.

After some schematic sketching this is the wild version.

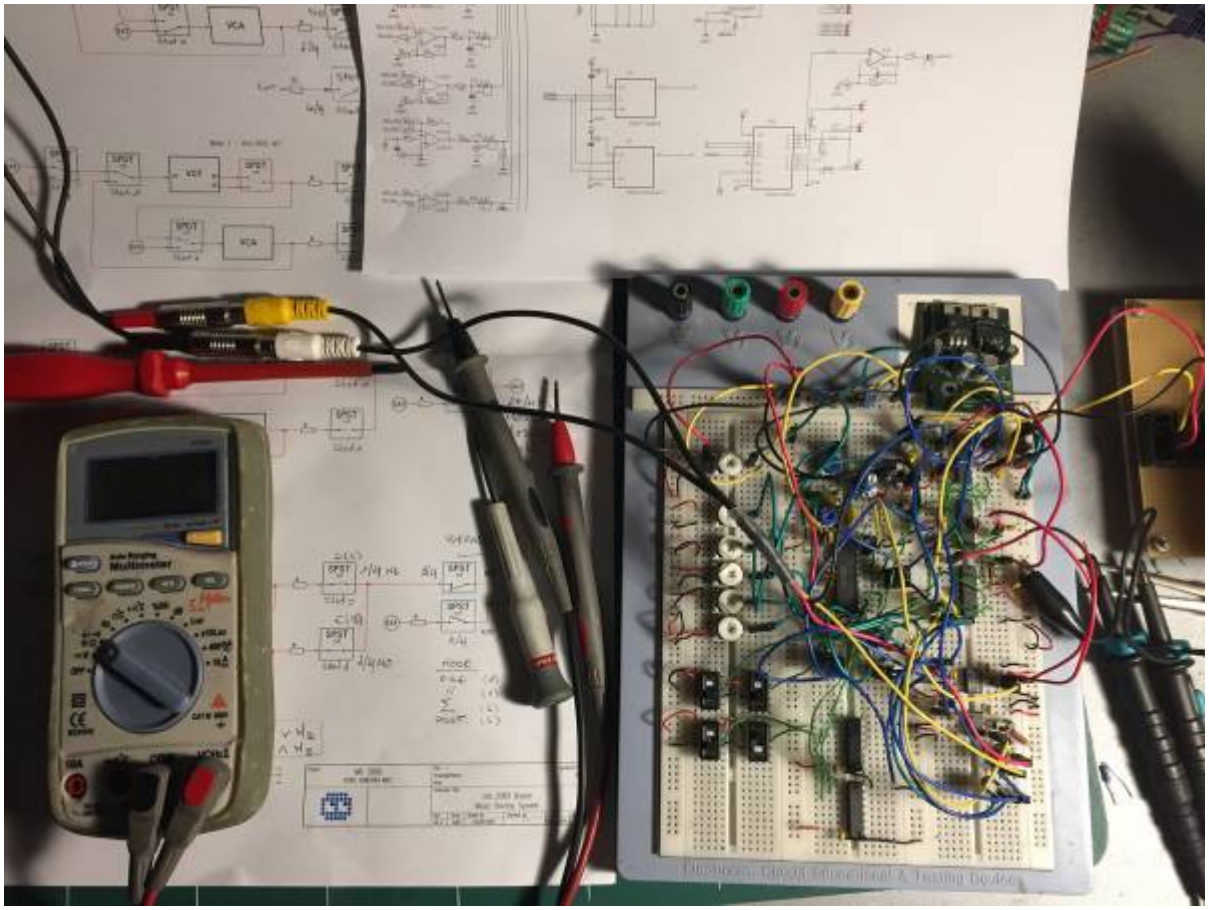

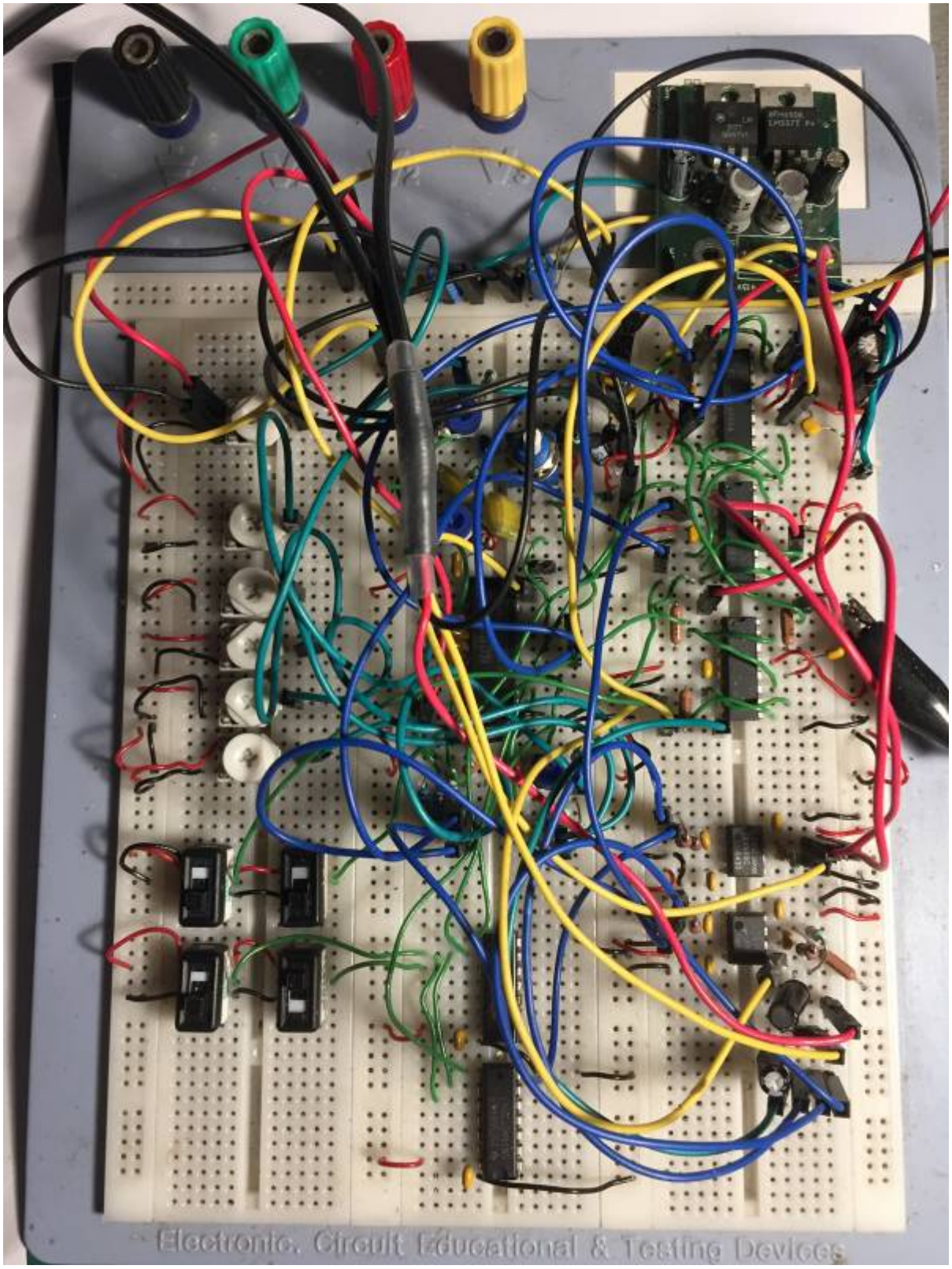

Precious information found about the 2069 once prototyped

The Absolute Rating Voltage is +/-5V, tried and fried ;)

CV inputs are in a 0 to 5V range.

All audio inputs are bipolar and support OverVoltage. A good hard clipping.

The SIG1 and SIG2 has inverted signal audio inputs.

It seems all VCA cells invert the signal, then same thing for the VCA part.
→ It will need some OP AMP, this is sure now…

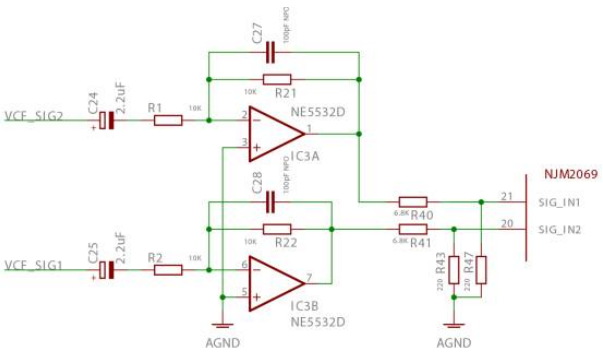

one for each SIG input.

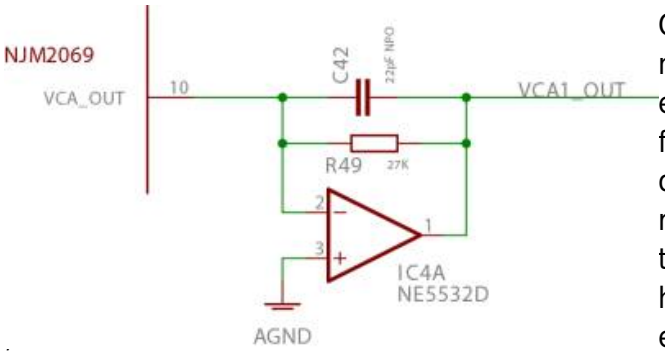

One for the VCA
We can observe in DW-8000 and DSS-1 Service manual that the VCA output has already an Inverter OpAmp Stage.
I did the same, I suppose original circuity respects the internal output Impedance.

LOG CV Input for cut-off Frequency is inverted input.

Lowest frequency is at 5V, Highest at 0V.
This CV needs to be inverted too.

LOG CV Input of the VCA seems unusable.

I've got only some NJM2069**BD** for spare then I used the **D** version present in my EX-800 to test Log CV of the VCA in the 2 versions, and it appears to be definitively not usable for both!
Maybe some other version (AD, DA...) of the chip release this function. I don't know.
→ But I respected and reproduced the two different existing circuit. This pin is to ground in DW-8000(AD)/EX-800(D) and acts as a kind of bias(?) in a DSS-1(BD).

Choices made during prototyping

- SPDT function added to the VCF outputs to switch between -12dB and -24dB... Of course.

- SPDT for ByPass function... Of course too!.

- Polarized caps to all audio inputs of the module, SIG1, SIG2, EXT(named like that to be clear) and 1 polarized cap on the output.
I checked, with some low offset Op Amps like NE5532 or NJM4580, this is enough to maintain offset and stability in all the circuit. Then no need of big and expensive bipolar caps between stages in circuit.

- Remember, I want the switching between the configuration modes digitally controllable. (MIDI, Recall...You know why ;) I try all the valid configurations, and finally choose the 4 most interesting.

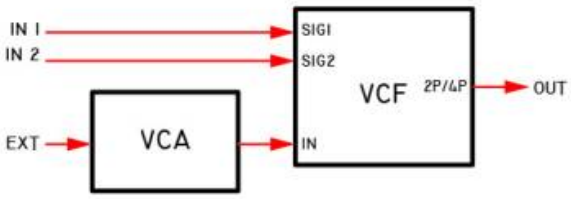

E
, VCA before VCF

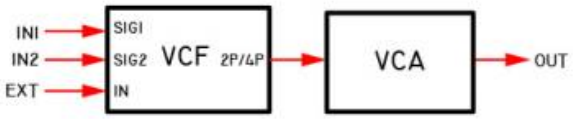

O
ST, VCA after VCF

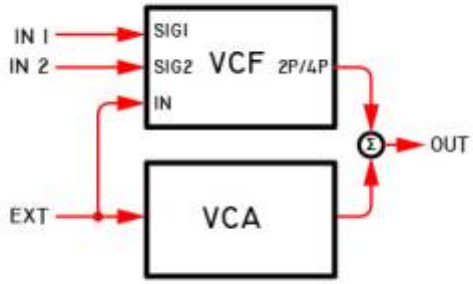

Mode 1 - PAR, VCA Parallel VCF
They share same Input and Output.

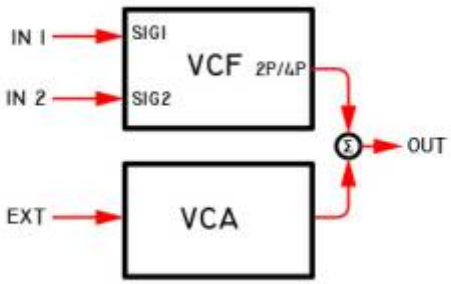

Mode 2 - SUM, VCA + VCF,
They share only output.
VCF direct input is connected to the ground.

From:
https://www.midibox.org/dokuwiki/ - **MIDIbox**

Permanent link:
https://www.midibox.org/dokuwiki/doku.php?id=mb_2069&rev=1505767099

Last update: **2017/09/18 20:38**