MB AY (YM) Boards

AY 3 8912 board

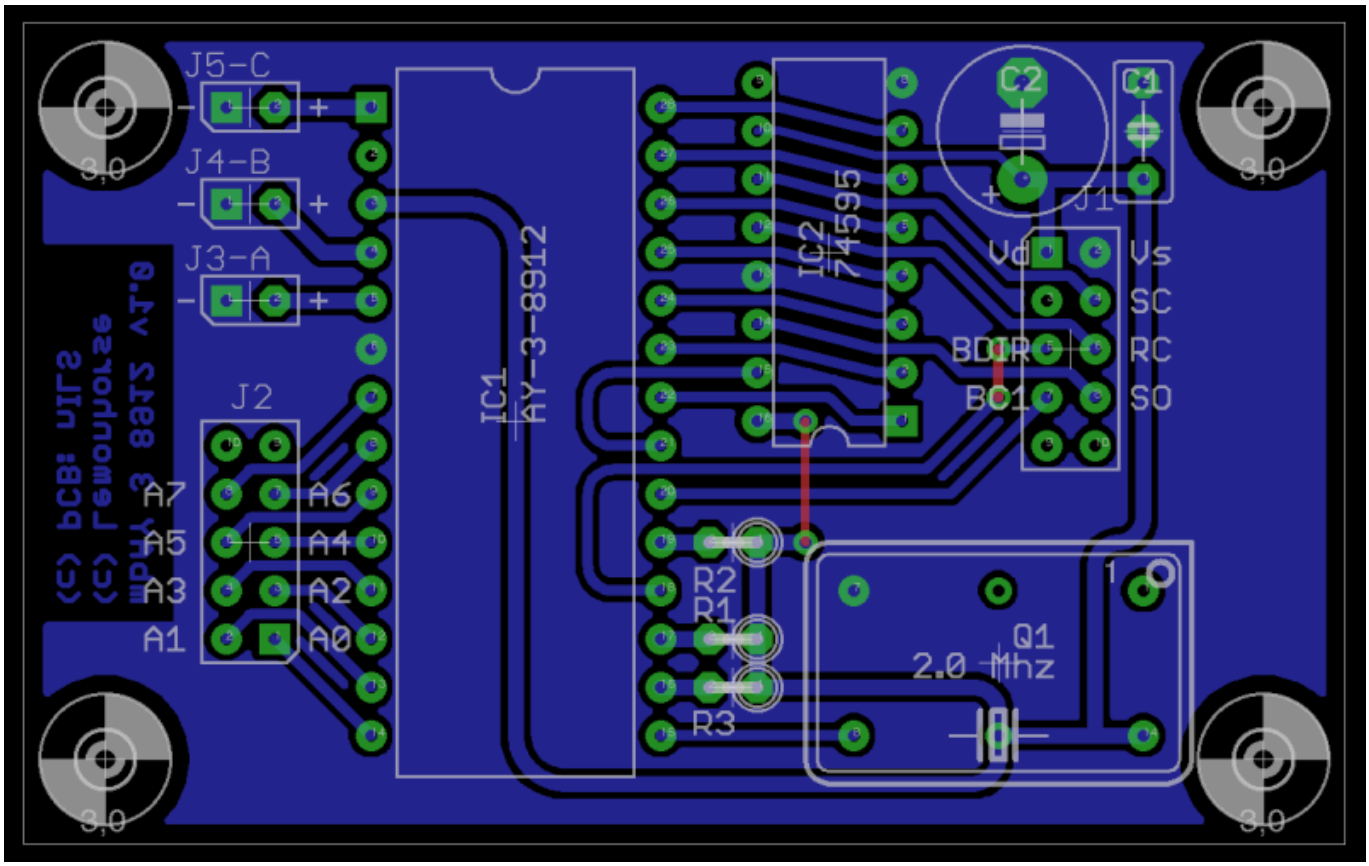

:

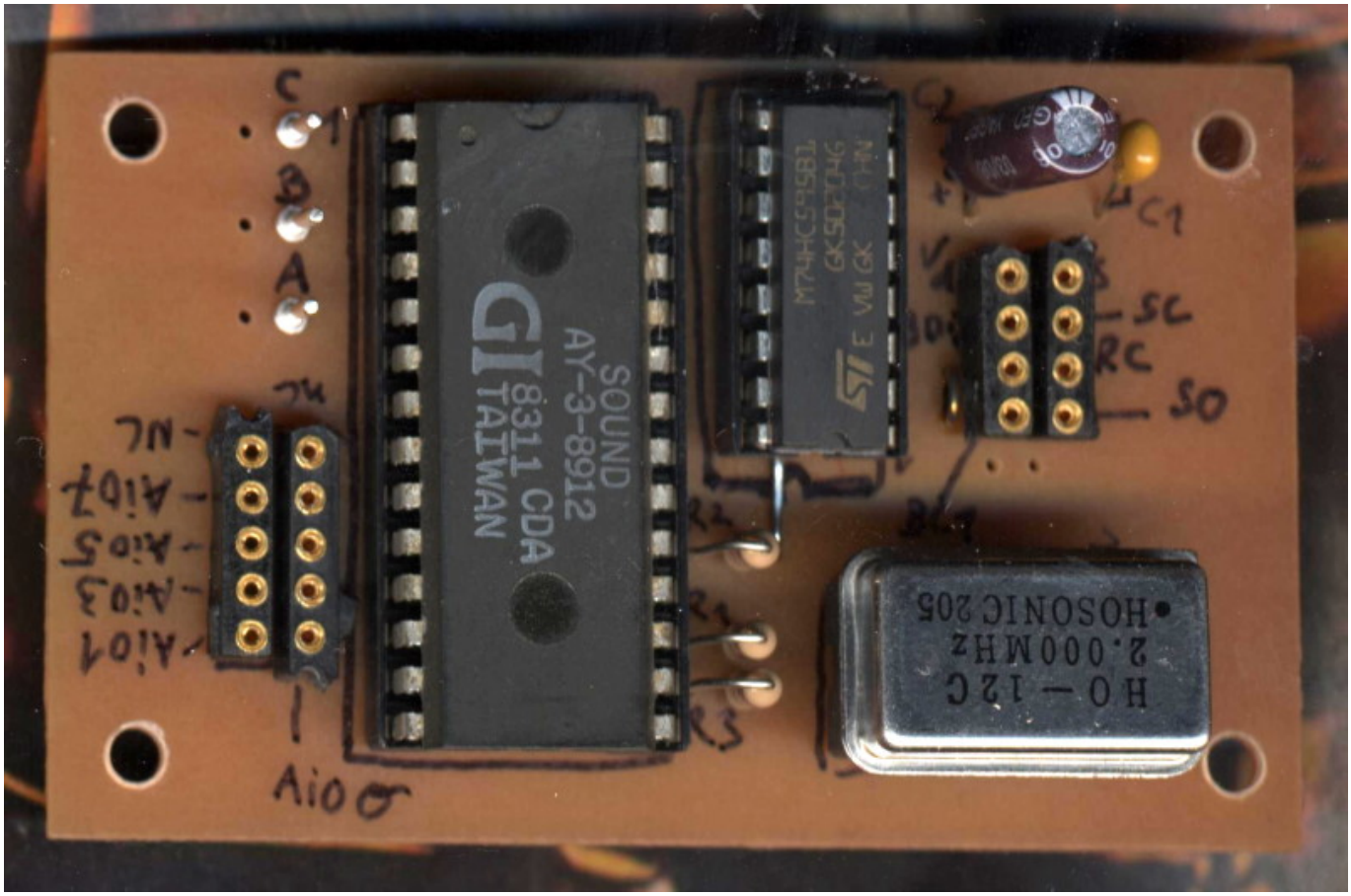
SOUND
AY-3-8912
8311 CDA
TAIWAN
SC
RC
SO
2.000MHz

:

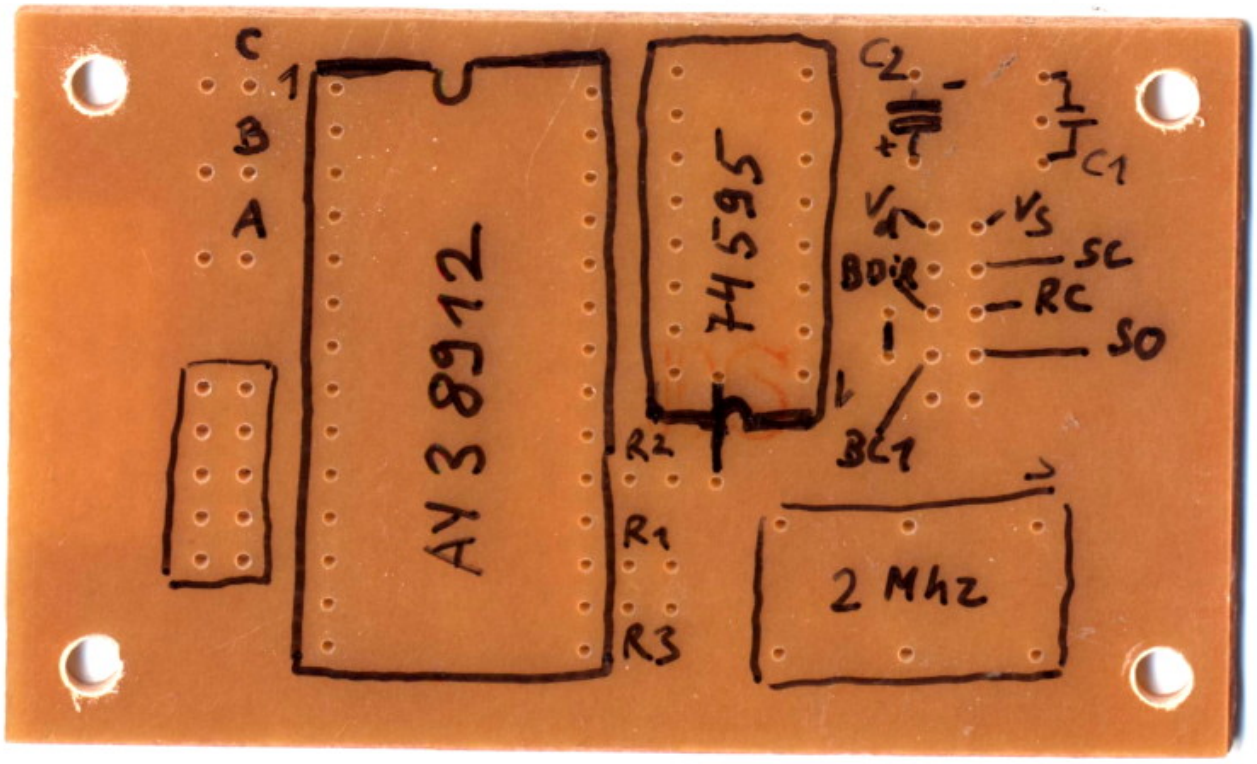
AY 3 8912
74 595
2 Mhz
SC
RC
SO
R1
R2
R3

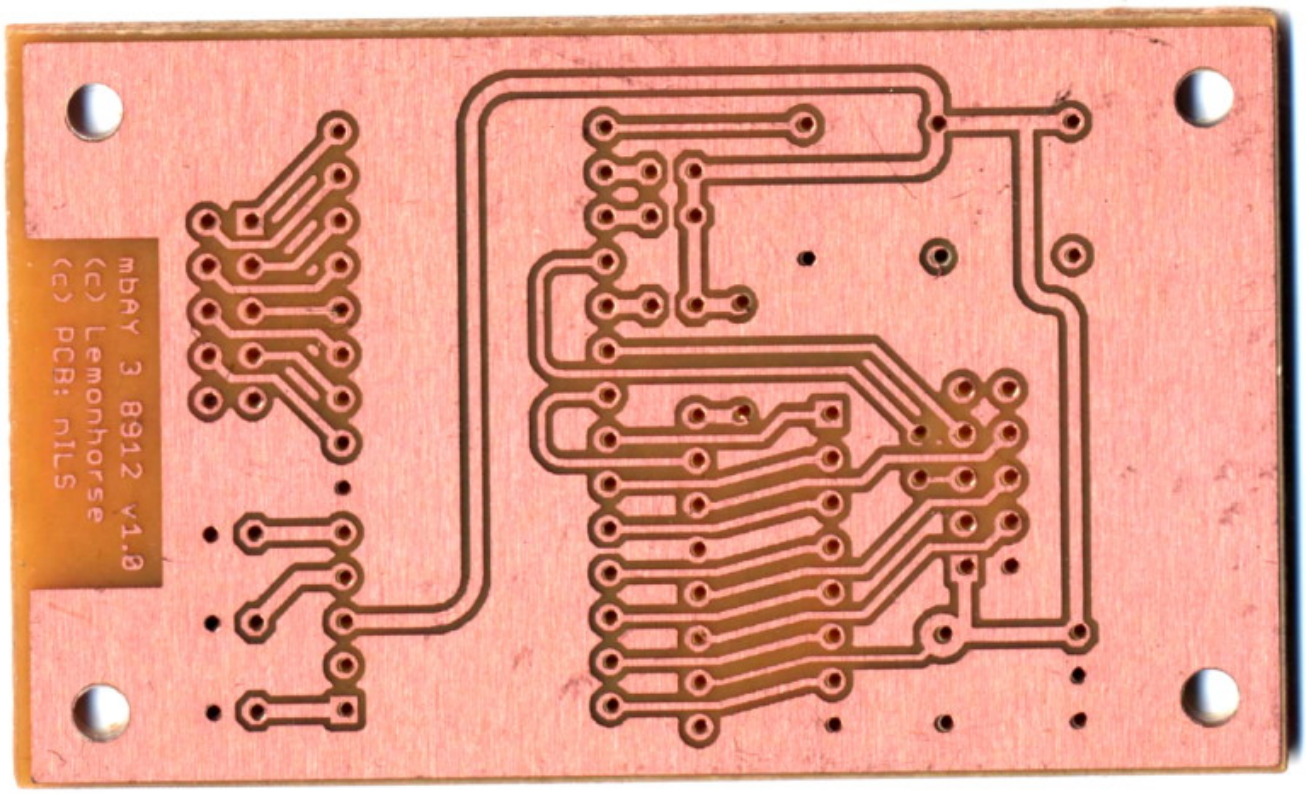

YM2149 Board

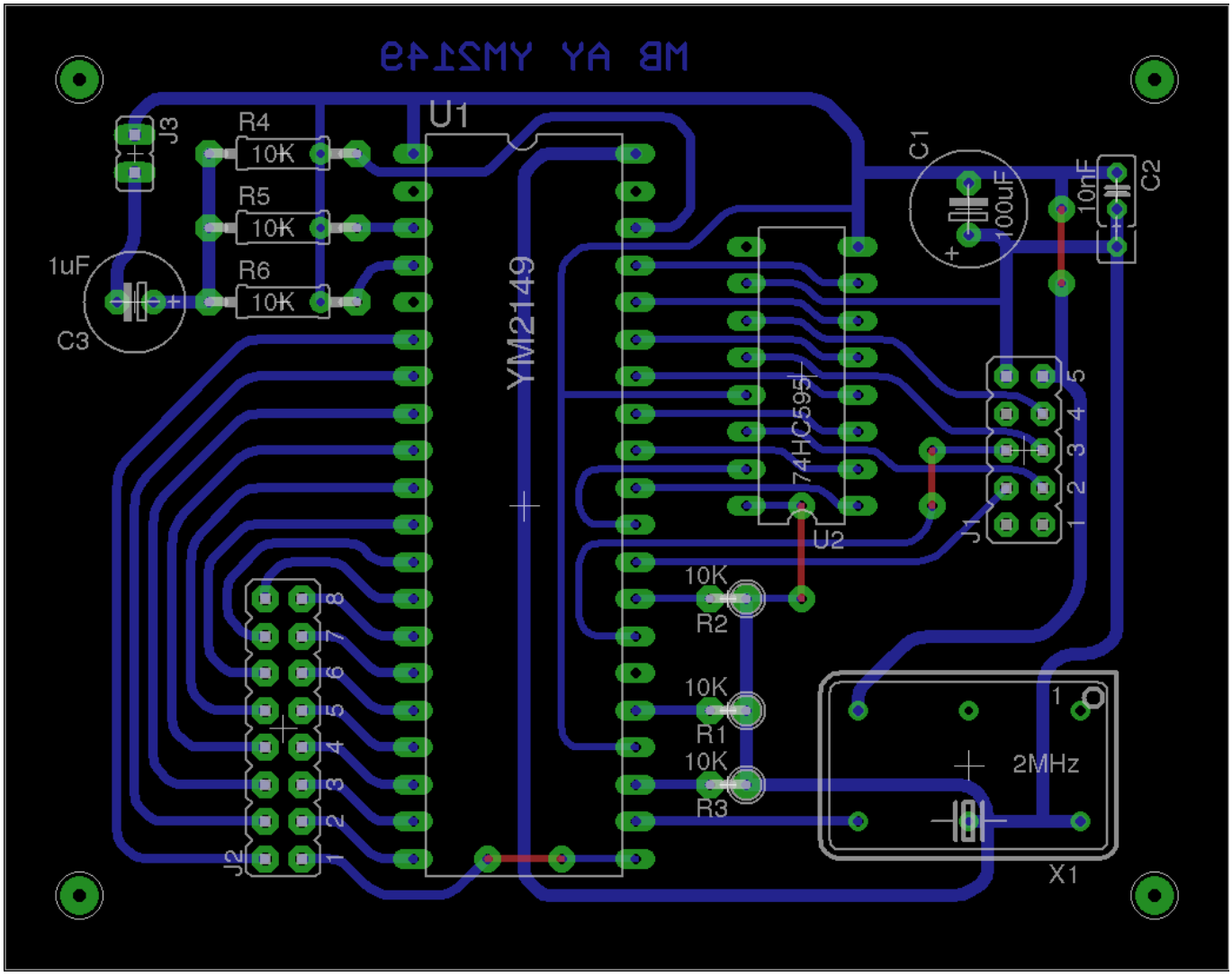
MB AY YM2149
U1
YM2149
J3
R4
10K
R5
10K
R6
10K
1uF
C3
C1
100uF
10nF
C2
74HC595
U2
J1
1 2 3 4 5
10K
R2
10K
R1
10K
R3
J2
1 2 3 4 5 6 7 8
2MHz
X1

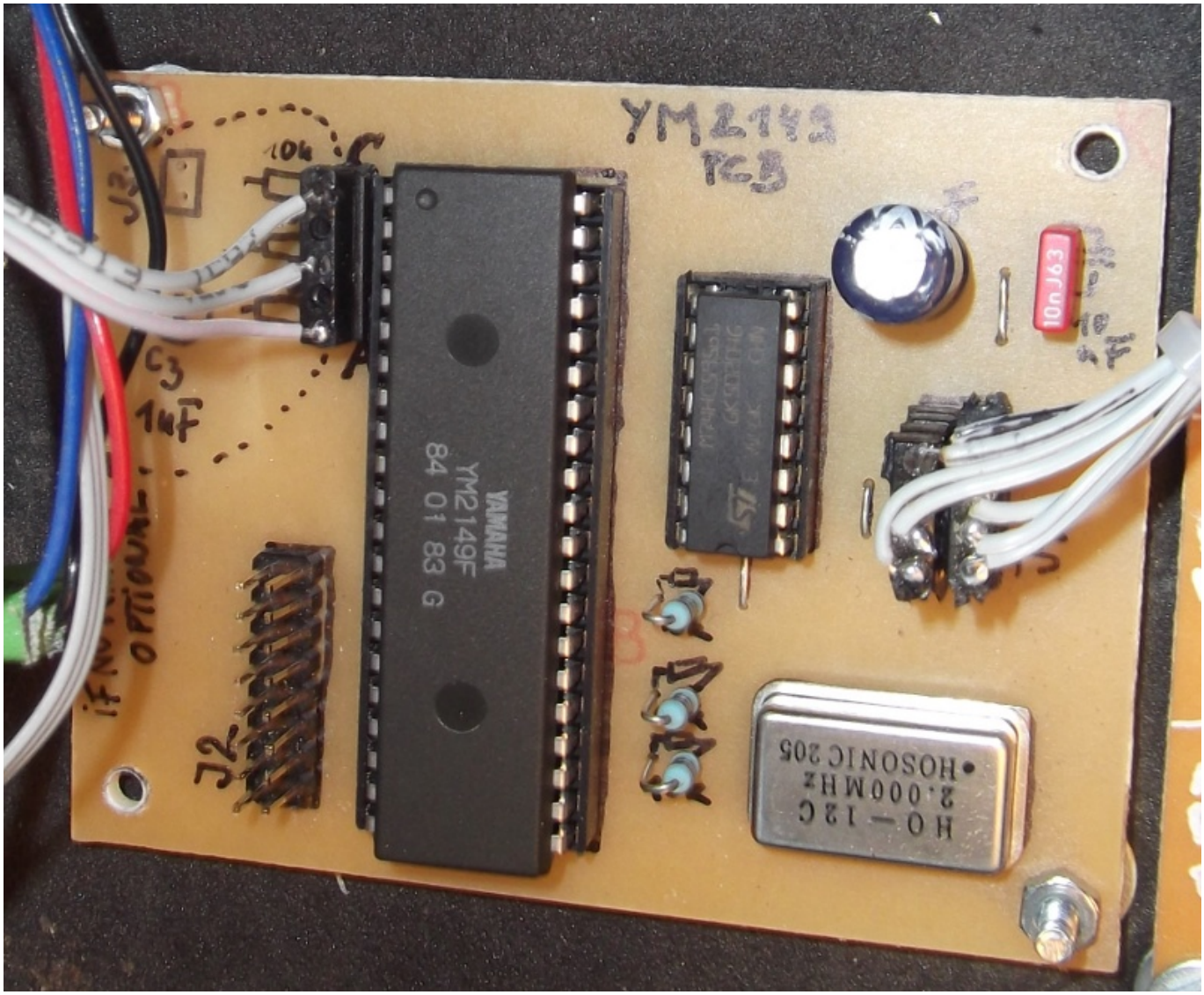

PCB Layout (pdf)

mbAY38912.pdf

::

:

Parts List

mbay38912pcbpartlistv1.txt

::

:

PCB

The AY 3 8912 PCB and the AY 3 8912 OP-Mixer PCB are available at Mikes Onlineshop

http://www.mikes-elektronikseite.de/shop_englisch/index.htm

[26.09.2008]

From:
https://www.midibox.org/dokuwiki/ - **MIDIbox**

Permanent link:
https://www.midibox.org/dokuwiki/doku.php?id=midibox_ay_3_8912_board&rev=1305306937

Last update: **2011/05/13 17:15**