MIDIBox AY 3 8912 - C64 Keyboard

MIDIbox AY 3 8912 - The Commodore 64 Keyboard



interconnection

The C64 Keyboard must be connected to **MBHP DOUT** (DOUT1: J3(Pin D0 to D7)) and **MBHP DIN** (DIN1: J3/J4(Pin D0 to D7))

See DOUTX4 ⇒ http://ucapps.de/mbhp/mbhp_doutx4.pdf

See DINX4 ⇒ http://ucapps.de/mbhp/mbhp_dinx4.pdf

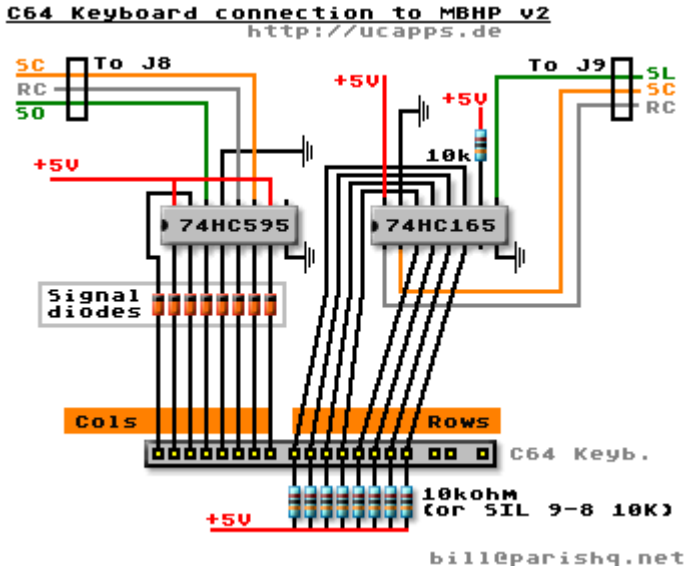

::.

From:
https://www.midibox.org/dokuwiki/ - **MIDIbox**

Permanent link:
https://www.midibox.org/dokuwiki/doku.php?id=midibox_ay_keyboard&rev=1269861521

Last update: **2010/03/29 11:18**