SD Card Module

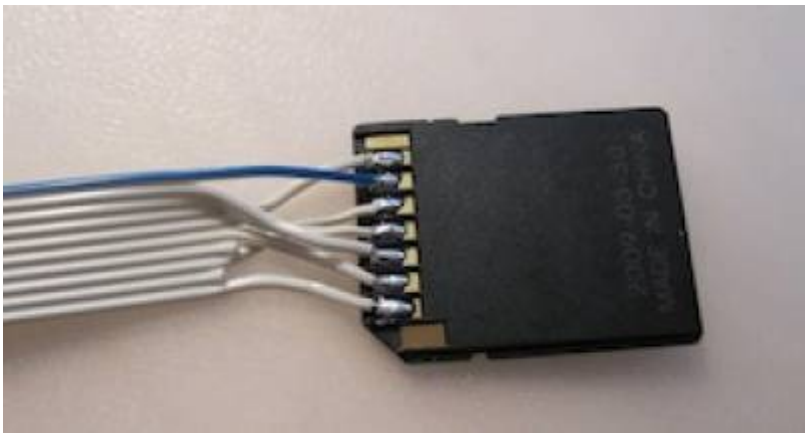

Introduction

SD Card Could be interfaced with Core board for Data Storage / Reading . It replaces Bankstick.

Interconnection

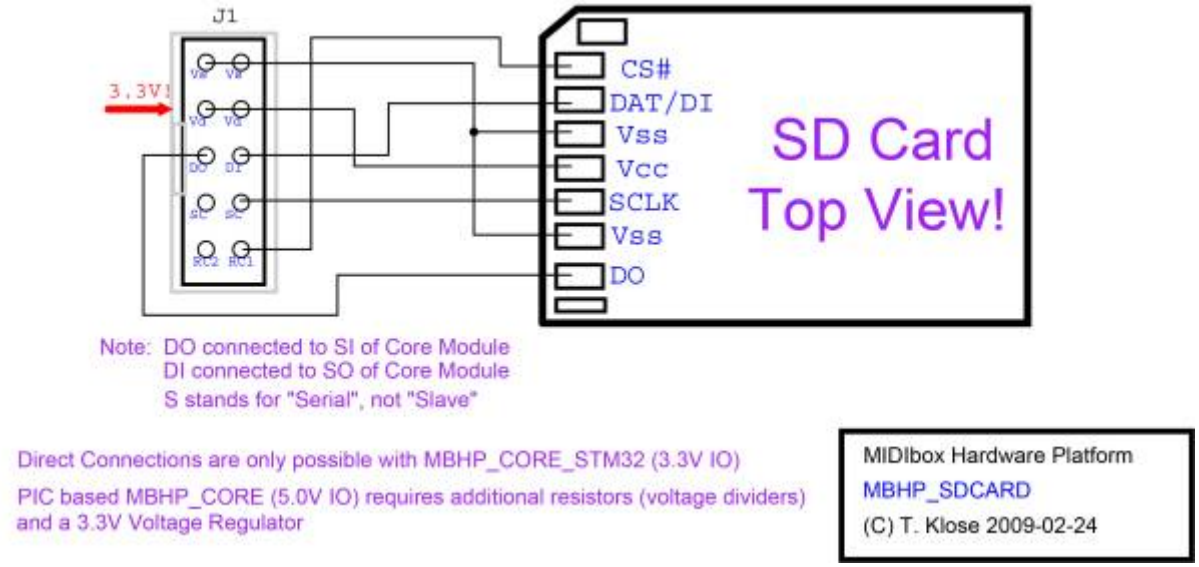

STM32 Specific

The resistor array R30 of the MBHP_CORE_STM32 module shouldn't be connected when a SD Card is used, because pads are configured in Push-Pull mode at 3.3V. SD Card transfers could work unstable with these Pull-Up resistors!

From:
https://www.midibox.org/dokuwiki/ - **MIDIbox**

Permanent link:
https://www.midibox.org/dokuwiki/doku.php?id=sd_card_module

Last update: **2016/08/05 15:44**