Dual SSM 2044 VCF

SSM2044 PCB Bulk Order

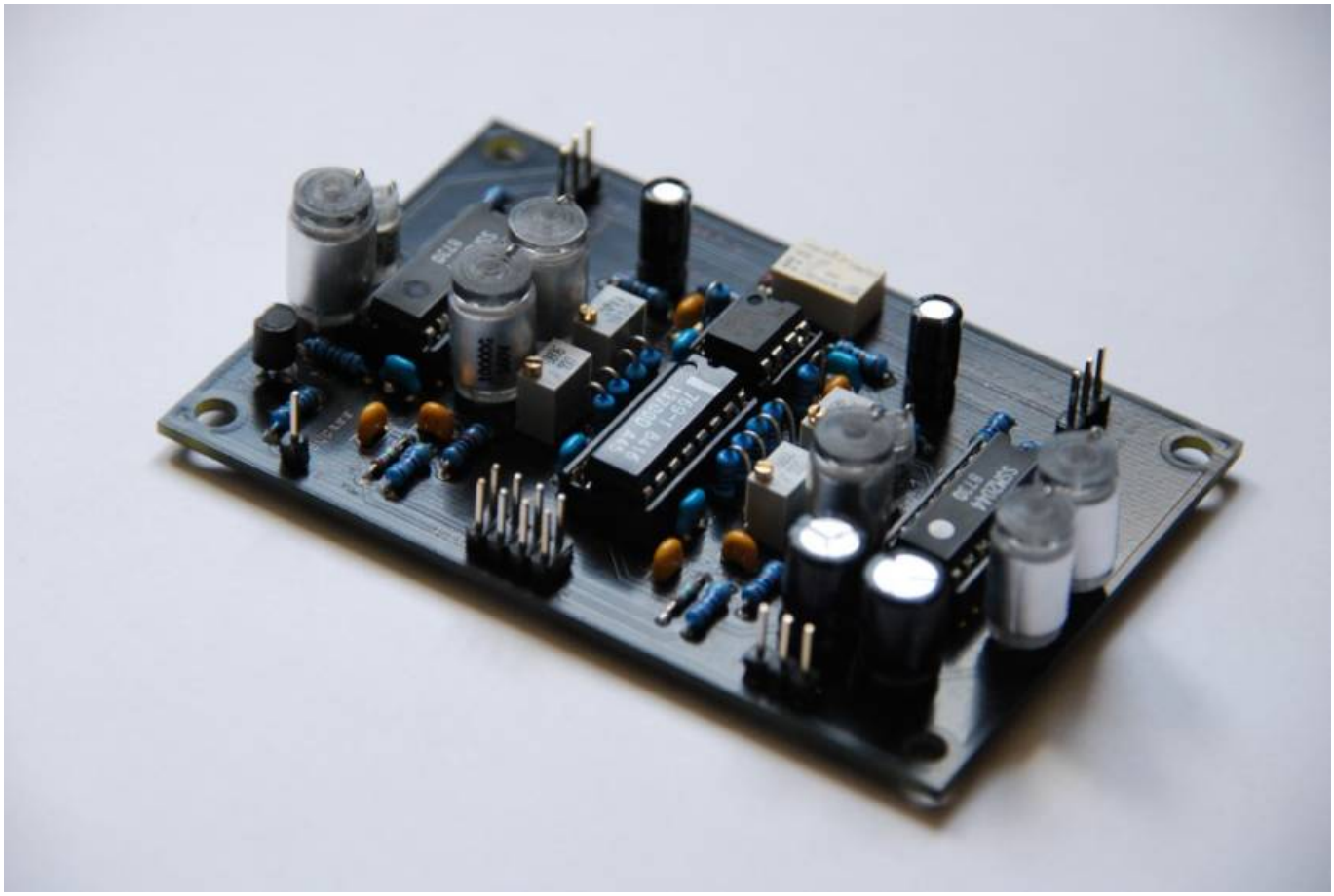

This PCB contains two of the famous SSM2044 24dB low pass filters with the necessary circuitry, additional LM13700 based Q linearization circuit and a tiny Omron micro relay for a software controlled (via gate out pins) bypass function. The layout is optimized for use with the AOUT_NG module, requiring the addition of a bipolar option when used with regular V/Oct sources like the original AOUT module.

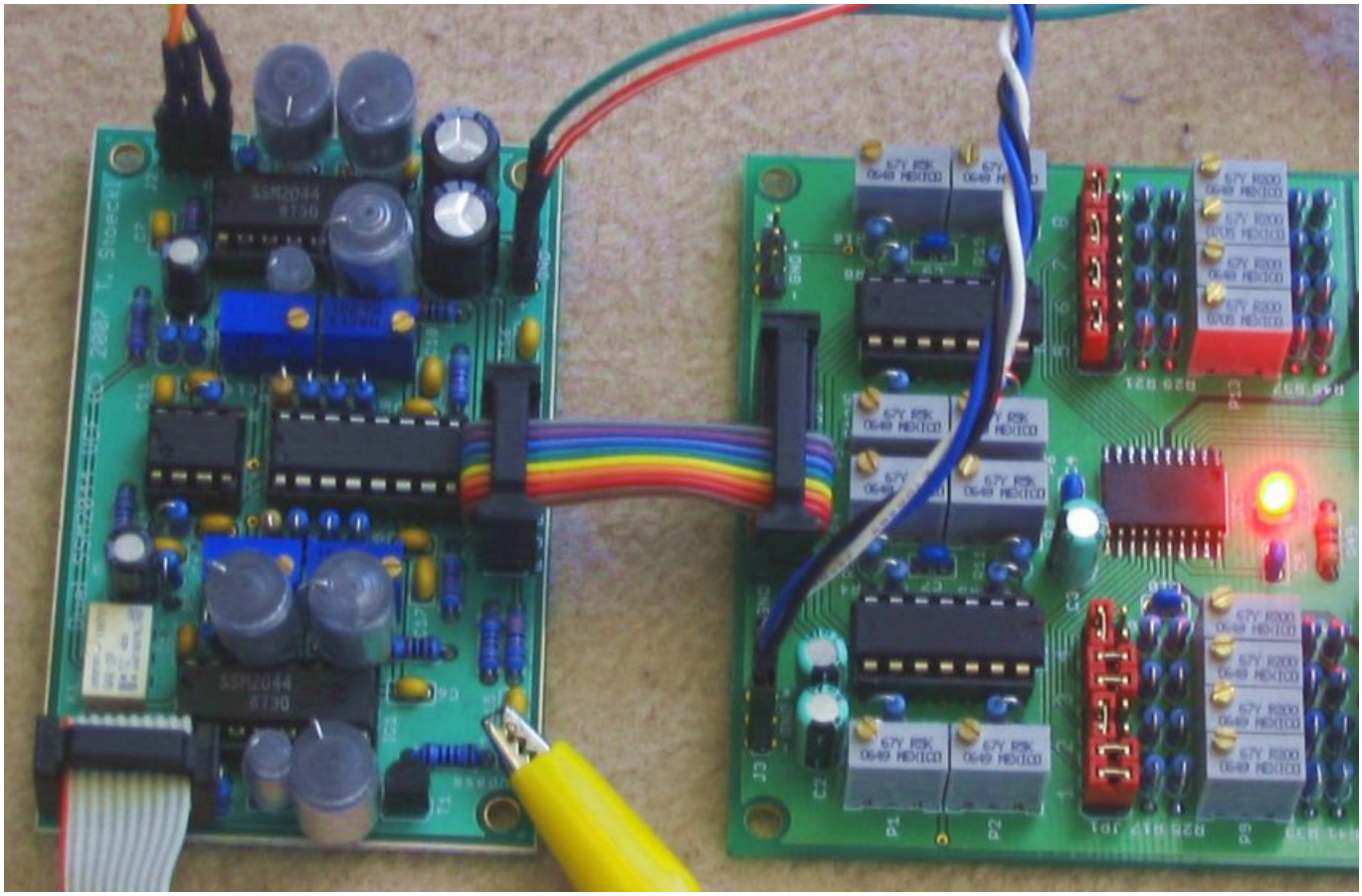

As you can see, on my prototype I didn't take the size of 10nF Styroflex caps into account... New board size is 90x60mm instead of 80x50mm.

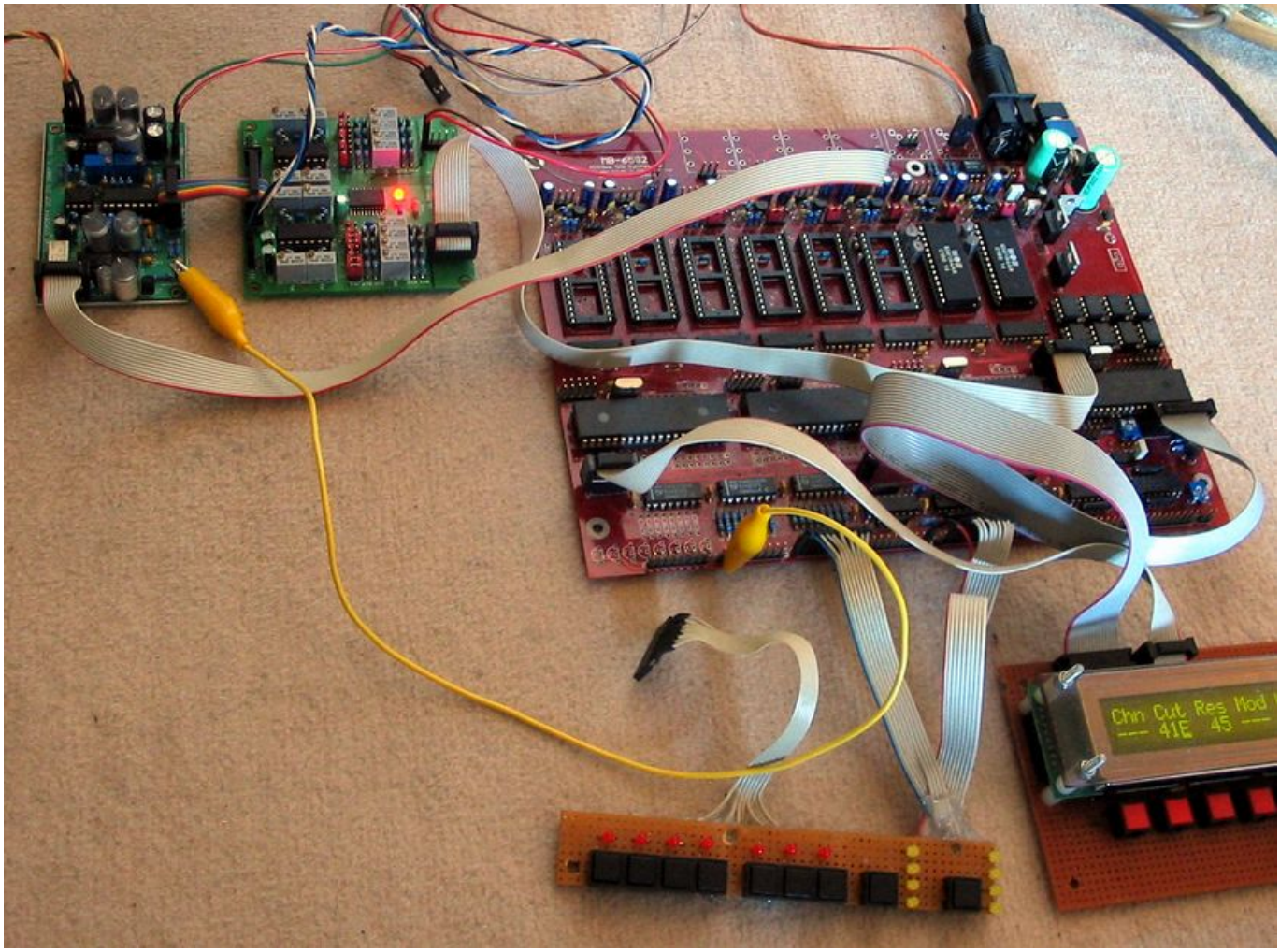

My prototyping setup, a MBSID V2 (MB-6582 base PCB) with 6581 SIDs and an AOUT_NG.

Here's a short audio demo: http://www.seppoman.de/stuff/SSMtest2.mp3 That's the “Bassline Demo2” default patch with SID filters turned off. First a sweep without resonance, then a bit of resonance and high resonance. Last a sweep up short before oscillation and down with oscillation (beware of high volume, the end is a bit distorted because of clipping)

TK made a very nice audio demo, too: http://www.midibox.org/forum/index.php/topic,11460.0.html

Layout and Schematic

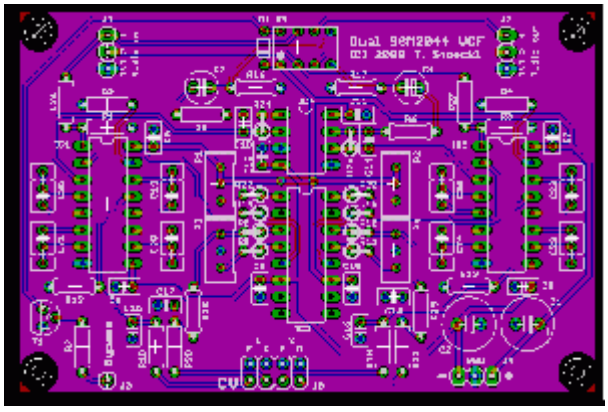

(click to enlarge)

Schematic

Parts List

Part	Value	Reichelt No.
C1,C2	220 uF	RAD 220/25
C3,C4	10uF	RAD 105 10/63
C5-C12	100nF	Z5U-2,5 100N
C13,C14	100pF	NPO-2,5 100P
C15-C18	470nF	Z5U-5 470N
C19-C24	10nF	STYROFLEX 10N
C25,C26	820pF	STYROFLEX 820P
D1	1N4148	1N 4148
IC1,IC2	SSM2044	
IC3	LM13700	LM 13700 DIL
IC4	TL072P	TL 072 DIP
K1	G6K-2P	G6K-2P 12V
P1,P2	10k	64W-10K
P3,P4	500	64W-500
R1-R6	220	METALL 220
R7-R13	1k	METALL 1,00K
R14,R15	100	METALL 100
R16,R17	10k	METALL 10,0K
R18,R19	24k	METALL 24,0K
R20,R21,R24-R27	47k	METALL 47,0K
R22,R23	27k	METALL 27,0K
R28,R29	100k	METALL 100K
T1	BC547	BC 547C

Total cost of all parts (without SSMs): about 13 Euros

Design

The SSM2044 is one of the classic integrated filter ICs, a 4-pole (24dB/oct) LP filter similar to e.g. the CEM3378/79. The sound is very rich and expressive (you heard the demos, right?). The big plus of the 2044 is that it is still widely available e.g. through eBay.

The main limitation of the 2044 for use in a digitally controlled CV application like MBSID/MBFM/MBCV... is that the response of the resonance input is exponential. that means, when controlled by a linear potentiometer or DAC, the usable range of control input is very limited, i.e. the lower third of values doesn't change very much, then there's a small area where you can really tweak the setting with good response, and in the upper third, the filter goes completely havoc.

In purely analog synths, this problem is adressed by using a negative log potentiometer that evens out this response curve. but when using CV for the resonance setting, this is not an option.

I've found a nice article from the 80ies where the CA3080 OTA is used to linearize the response. The CA3080 has recently become an obsolete part, you can still buy them, but they're getting quite expensive. So I adapted the design to work with the alternative LM13700 and tweaked the values until the behaviour was to my taste.

Another problem with the 2044 is that it produces some crackling noises when the CV changes are steppy (like the output of a DAC is). This was cured by adding a few capacitors to the control lines that low pass (smooth) these little steps.

The control summer found in all the documented designs on the web was removed. The frequency input of the 2044 expects an input of about -100..+100mV. The mentioned cirquit adapts that onto the standard V/Oct CV range. But this also means you would first need to adjust offset and gain of this cirquit to make the SSM input conform to that standard and then calibrate the output of your AOUT module to also comply with this standard. V/Oct is certainly important in a completely analog modular synth where several analog control sources are mixed and fed to that input, but in a situation where the AOUT is the only source, this conformity is not good for anything. So removing this stage of complexity reduces size and cost and takes away another level of necessary calibration.

The consequence of this is: If you want to use this module together with **“non-AOUT” CV sources**, you will need to **add the control summer circuit externally** (I'll publish a schematic for it soon). And, if you're using the module together with the **classic AOUT** module, you will need to add the **bipolar option** (as documented on the AOUT page) at least for both frequency channels (normally AOUT1 and AOUT3).

Filter Caps

It's possible to use different types of filter capacitors - above I listed the well respected Styroflex types. Before that I also tried ordinary ceramic capacitors and to my ears, the sound wasn't extremely different or worse with them. There are some subtle differences but as some people found it hard to find Styroflex caps, I just want to point out that these are not the only way to get a good sound :) - in general, it's a good idea to use capacitors with low tolerance (e.g. 5% or 2%). E.g. you could also try out Wima FKP-2 or MKS-2 capacitors (there are versions with several tolerances). The 820pF value is a bit harder to find than the 10nF value.

Another hint: I found out that **with different capacitor types, the resonance response of the SSM does change**. If with your capacitors, you aren't able to reach self-oscillation (or it sets in way too early), you can compensate by using a different value for R22 and R23. E.g. with the ceramic caps, I used 47k resistors.

Bypass Relay

The “bypass” function of the module in fact is an “activate” signal, i.e. the bypass pin expects a logic high signal (5V) to actually engage the filter (for both channels). This behaviour might seem a bit uncommon, but that way you can connect the pin to one of the gate out pins on either the Core or the (MAX525) AOUT module, so you can store the state of the filter together with your Bankstick patches. To use the bypass function on MBSID, set “#define DEFAULT_J5_FUNCTION 3”, recompile and upload, then connect one of core:J5's pins to J3 of the SSM module. Now you can turn the filter on and off by toggling the respective S#1...S#8 setting in the EXT menu.

If you don't need this function, you can also solder two bridges instead of the relay (as shown below) and leave out R7, D1 and T1. That'll make the filter permanently active.

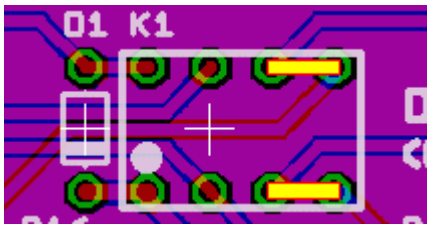

The Omron G6K-2P relay is available at several common places like Mouser, Digikey, Reichelt etc, but is a bit on the expensive side. If space is no issue, you could also use some short wires to solder in a different larger/cheaper/available 12V DPDT relay.

Calibration

(These instructions are for MBSID V2 in combination with an AOUT_NG).

For MBSID, the standard channel assignment is CV1 and CV3 for cutoffs, CV2 and CV4 for resonance. First calibrate the AOUT_NG to normal V/Oct like described on the NG page. Then in the EXT menu of the ensemble, turn on F2A (Filter cutoff/resonance routed to AOUT 1,3) and Iv1/Iv3 (invert AOUT 1/3). Then in the FIL menu of the ensemble, increase the Max param to FFF, turn off Log.

Calibration of the cutoff frequency is done on the AOUT_NG. Set both cutoff CV channels (CV1 and CV3) to bipolar mode. Now, the gain trimmers (P1..P8) set the cutoff range while the offset trimmers (P9..P16) shift that range up and down. For a start, now adjust these trimmers in a way that min. cutoff will set the cutoff very low and max cutoff will open the sound to the top.

Now, the resonance: Set both resonance CV channels (CV2 and CV4) to normal (not bipolar) mode. As explained above, the SSM2044 has an exponential Q response that needs to be compensated for usage with linear CVs. This means you want the Q to come up nicely without completely going mad at higher settings. The LM13700 does a transfer function similar to an audio compressor on the Q CV to make controlling high Q settings easier.

P1 and P2 on the SSM PCB adjust the overall gain, P3 and P4 set the breakpoint. For calibration, first set the breakpoint trimmers to about mid (use your multimeter), then adjust the gain to a point where Res=255 gives a good oscillation. Then adjust the breakpoint until Res around 240 does just not self-oscillate. To get both channels similar, it's a good plan to adjust both values a few times alternatingly and maybe compare the set trimmer values with a multimeter.

After the resonance is calibrated, you can now crank it up all the way to tune the cutoff frequency more exactly.

From:
https://www.midibox.org/dokuwiki/ - **MIDIbox**

Permanent link:
https://www.midibox.org/dokuwiki/doku.php?id=ssm2044_pcb&rev=1238942397

Last update: **2009/04/05 14:39**