TM5 Gate-Expansion

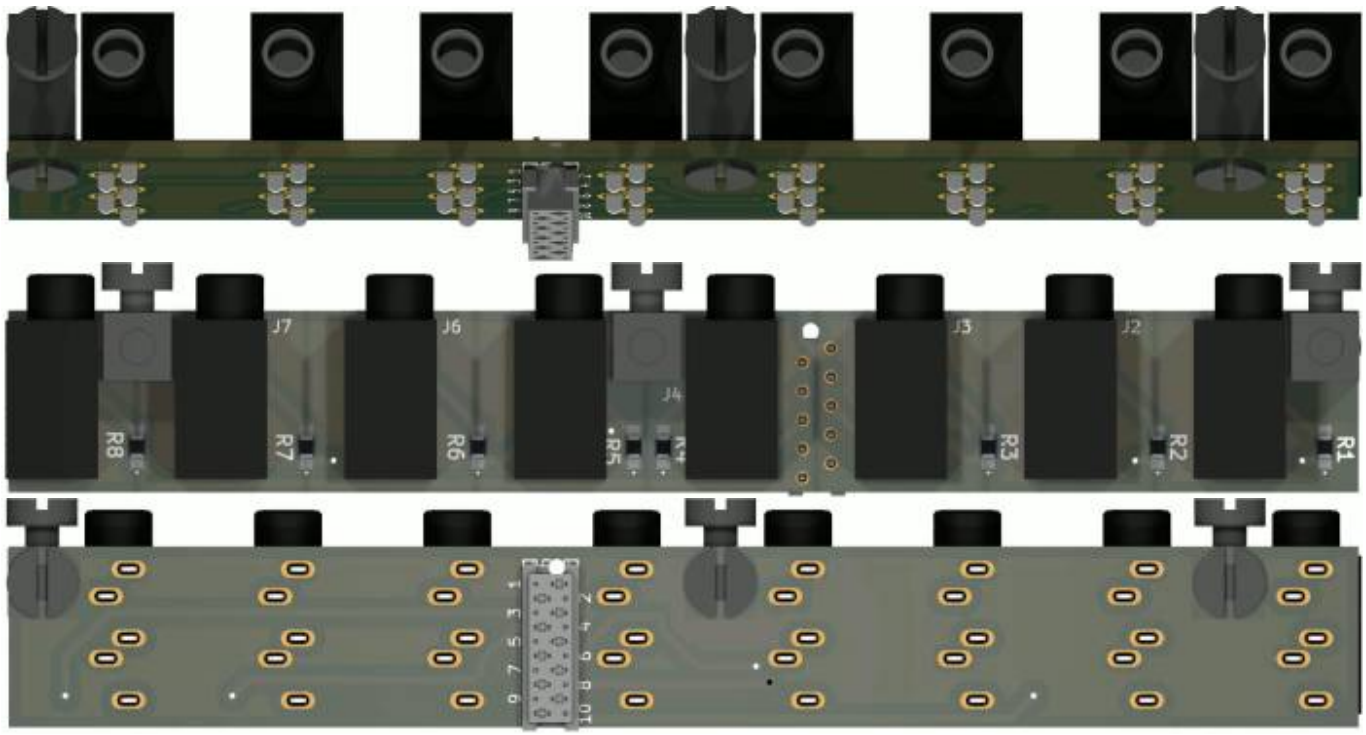

This are the Gate In/Out boards, 4 off them are needet to get 16x Gate-input/Trigger, and 16x Gate-Output

Shematic

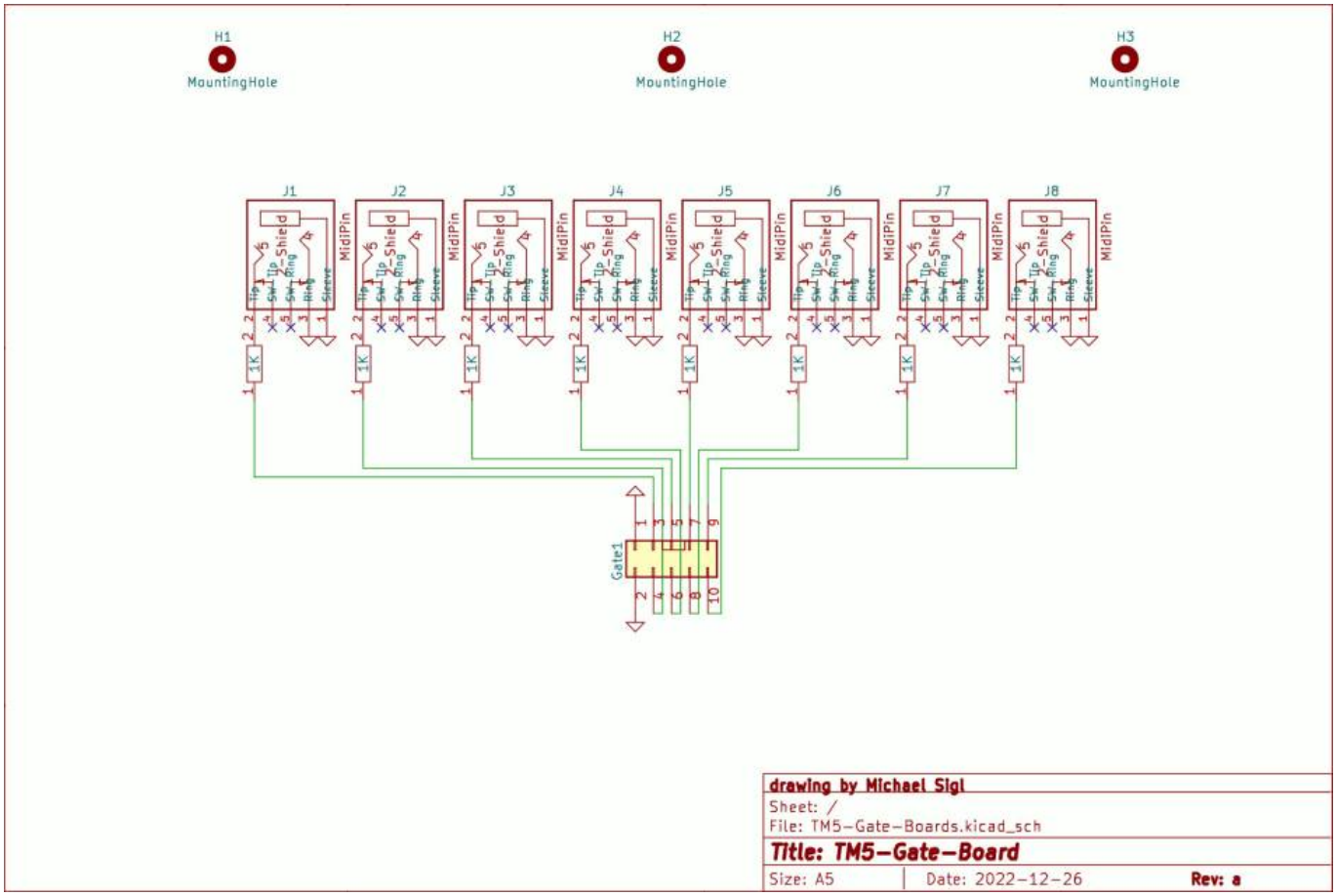

Building and BOM

You need this PCB 4times

BOM

qty	reference	value	footprint	MouserPartNr
1	Gate1	Header-2×5-Micromatch	Header-2×5-Micromatch	571-1-2178710-0
8	J1-J8	3.5Jack for Gates	3-5JACK-CUI_SJ1-3535NG	490-SJ1-3535NG
8	R1-R8	1K	R-1K-0805-250mW	667-ERJ-P06J102V

ok this is a list for one PCB, for Triggermatrix you need that 4times!
copy following list into this mouser.com-Link

```
571-1-2178710-0|4
490-SJ1-3535NG|32
667-ERJ-P06J102V|32
```

Order from Reichelt:

2xMicromatch-connector 10pin

The 3x Montage Blocks H1,H2,H3 * 4 = 12 - is already includet in the triggermatrix5 - BOM!

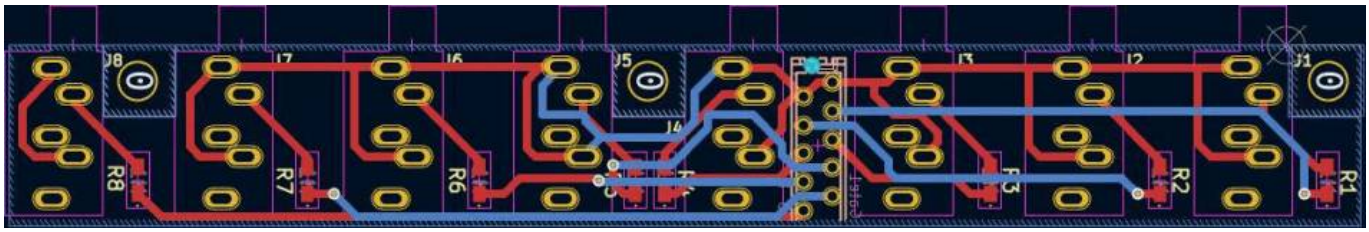

To Do

waiting for Prototype PCB

Community users working on it

- **Phatline** = PCB & Shematic, UI-Programming, Documentation...

Just let a Private message on the forum to user already involved.
or join the forum: Triggermatrix 5

From:
https://www.midibox.org/dokuwiki/ - **MIDIbox**

Permanent link:
https://www.midibox.org/dokuwiki/doku.php?id=tm5-gate-board&rev=1672258399

Last update: **2022/12/28 20:13**