TM5 Housing

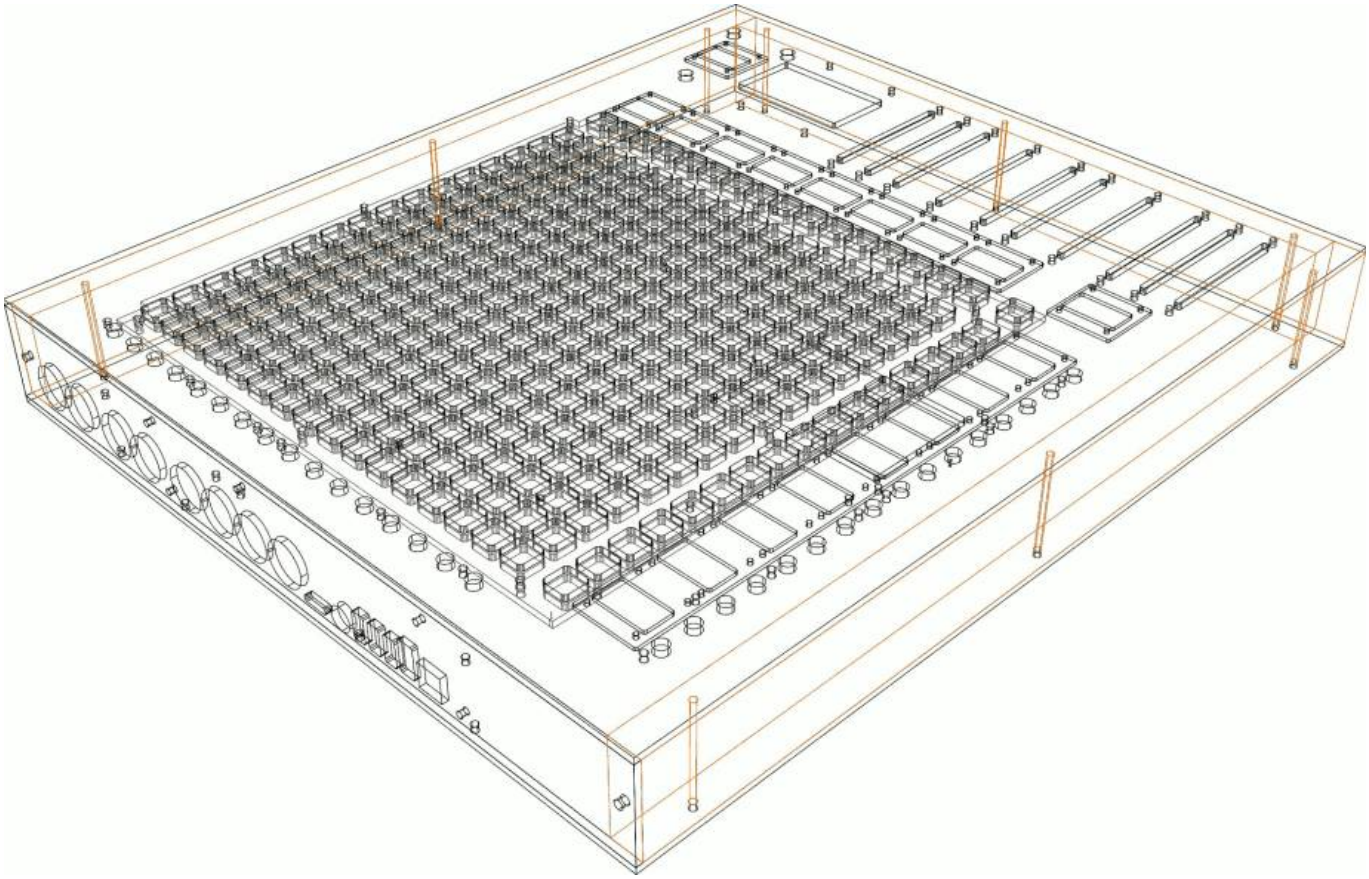

Panels

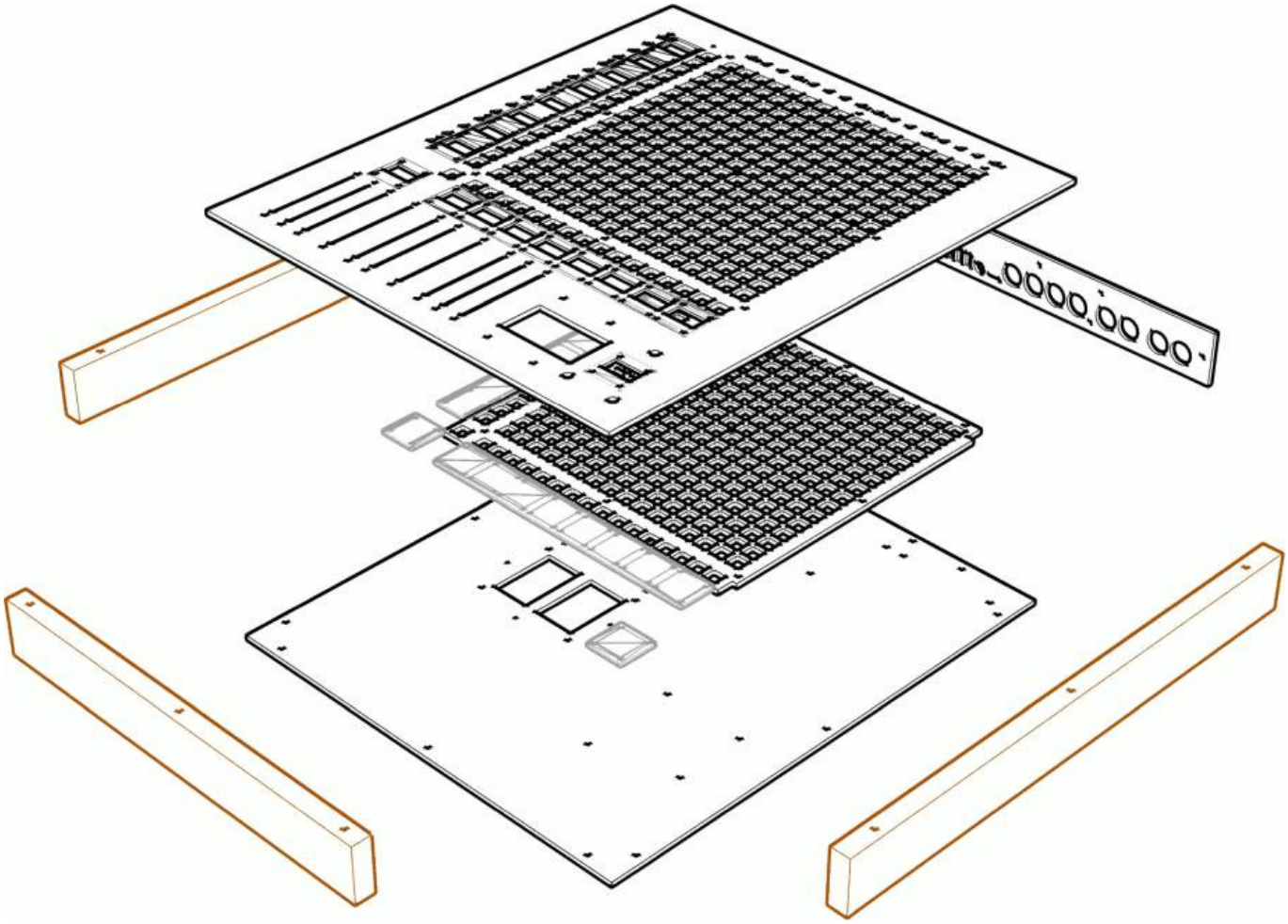

Frontpanel

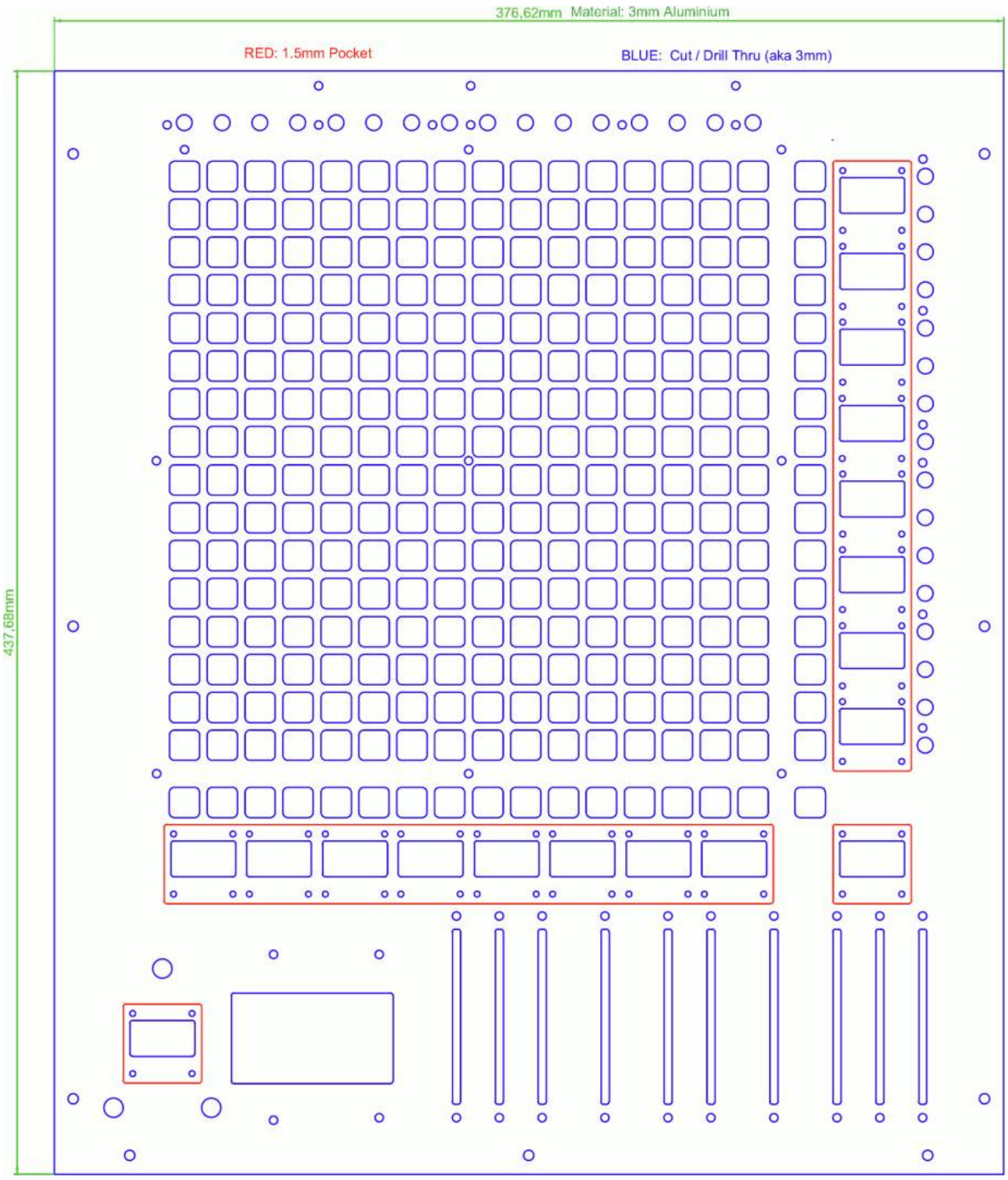
376,62mm Material: 3mm Aluminium
RED: 1.5mm Pocket
BLUE: Cut / Drill Thru (aka 3mm)
437,68mm

Backpanel

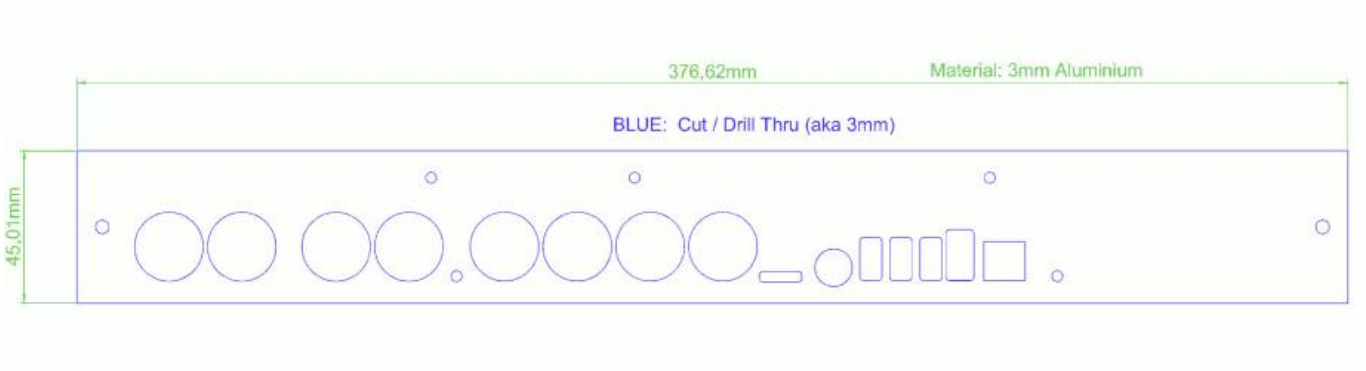

Groundpanel

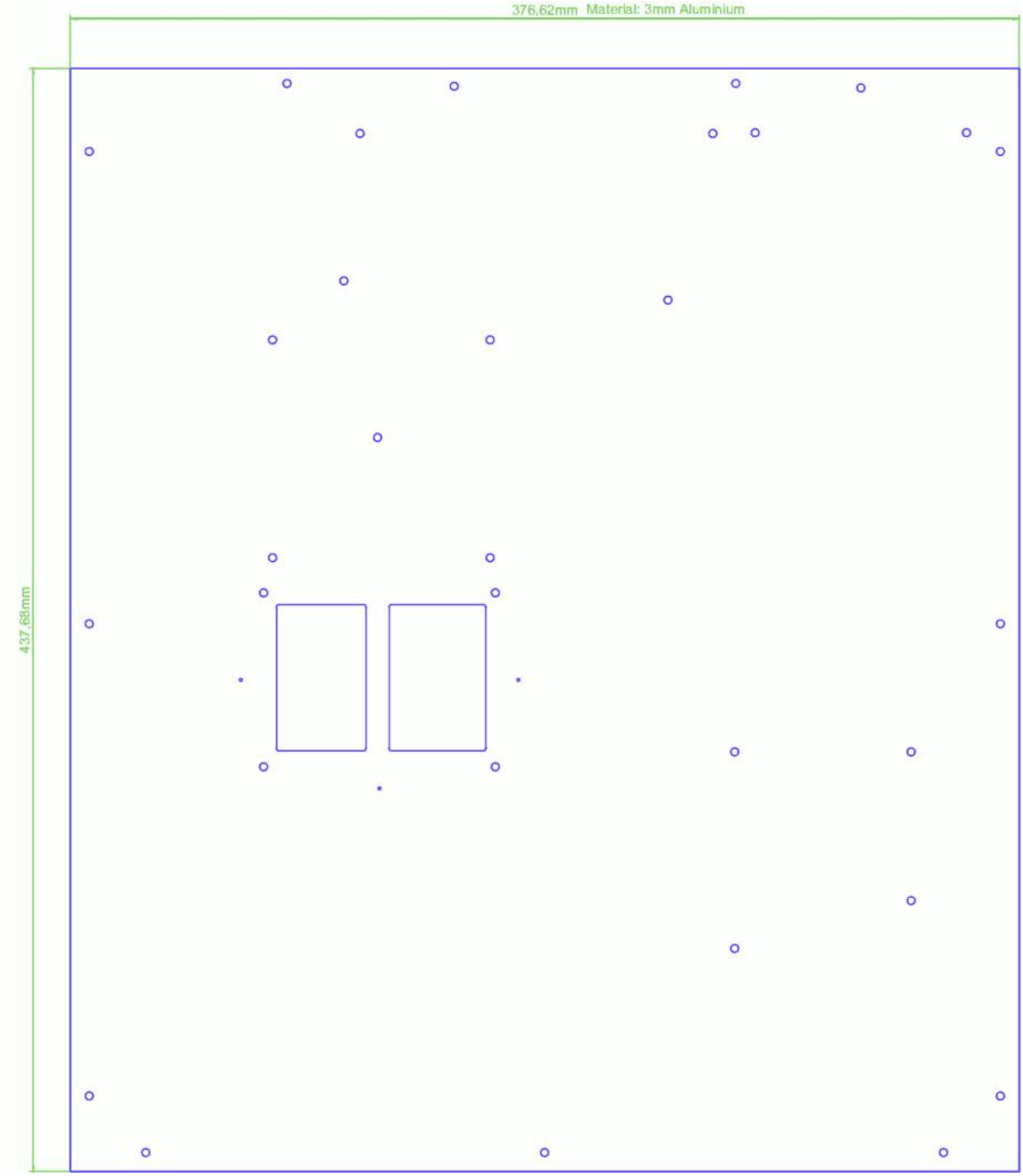

BLM-Acrylic Spacer

3mm Black Opak Acrylic for example Formulor (EU)
or ponoko (US)

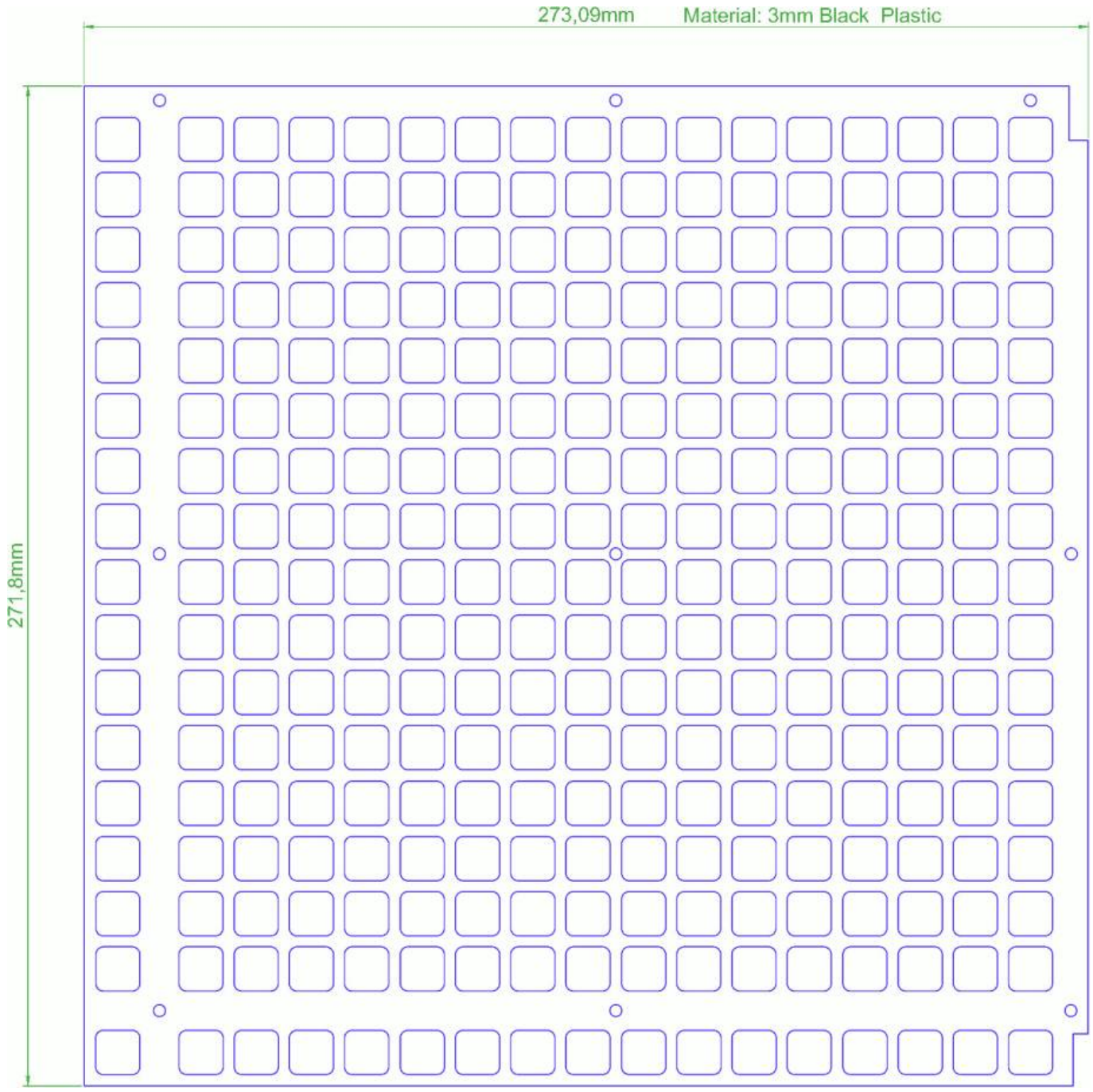

Protection-Glass for Screens

use 1mm Clear transparent Precision-Acrylic for example Formulor (EU)
or ponoko (US)



From:
https://www.midibox.org/dokuwiki/ - **MIDIbox**

Permanent link:
https://www.midibox.org/dokuwiki/doku.php?id=tm5-housing&rev=1673562024

Last update: **2023/01/12 22:20**