TM5 Housing

this is the Housing for Triggermatrix5

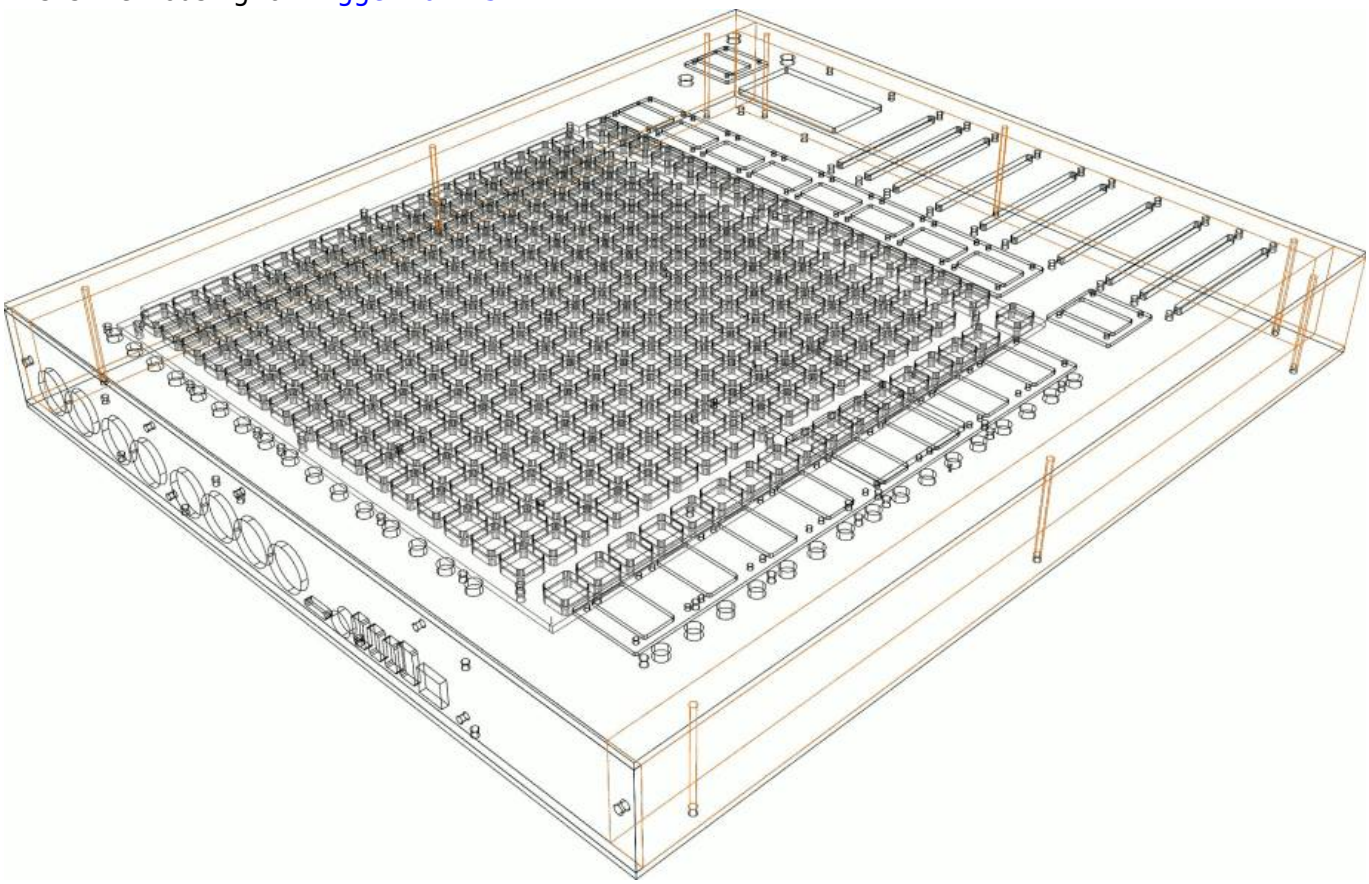

Panels

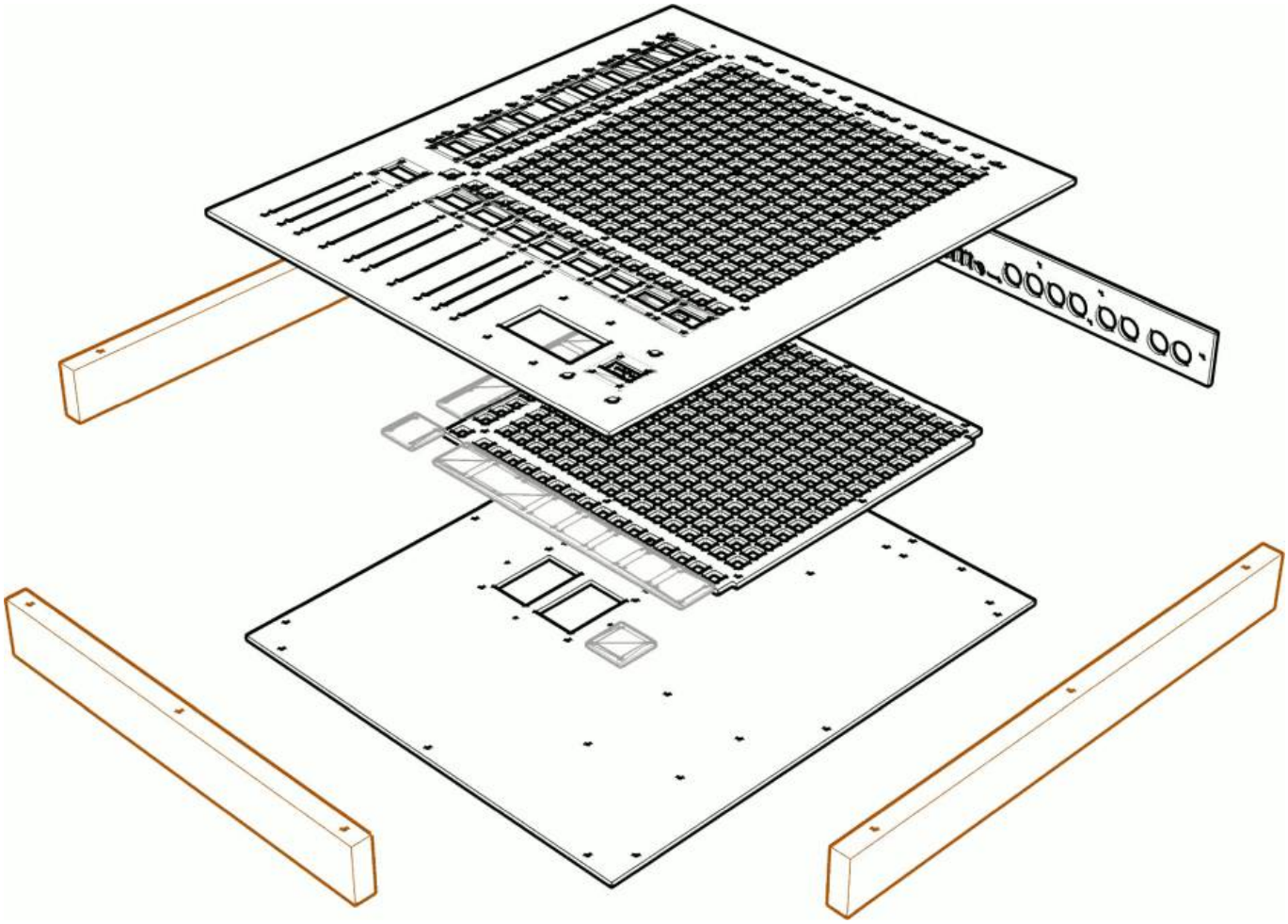

Frontpanel

tm5-frontpanel.zip

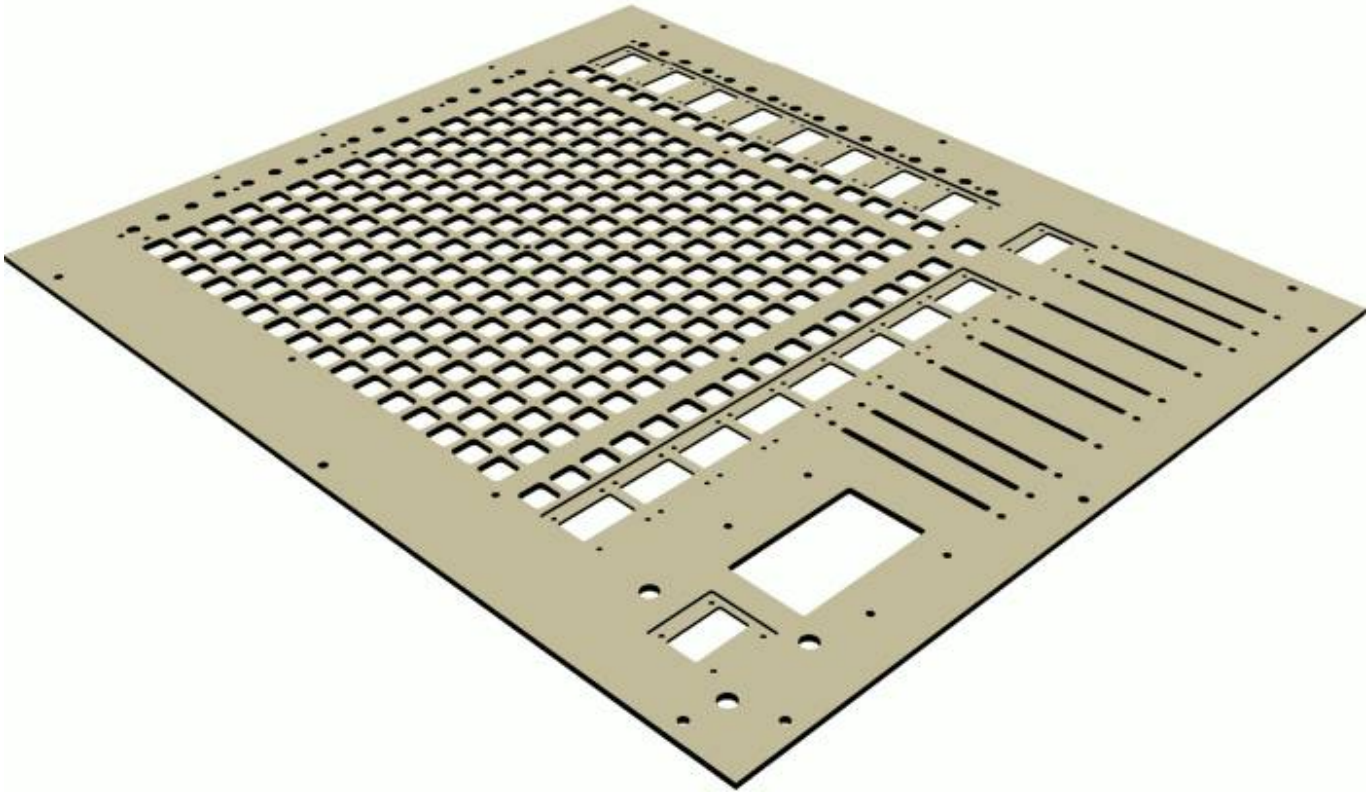

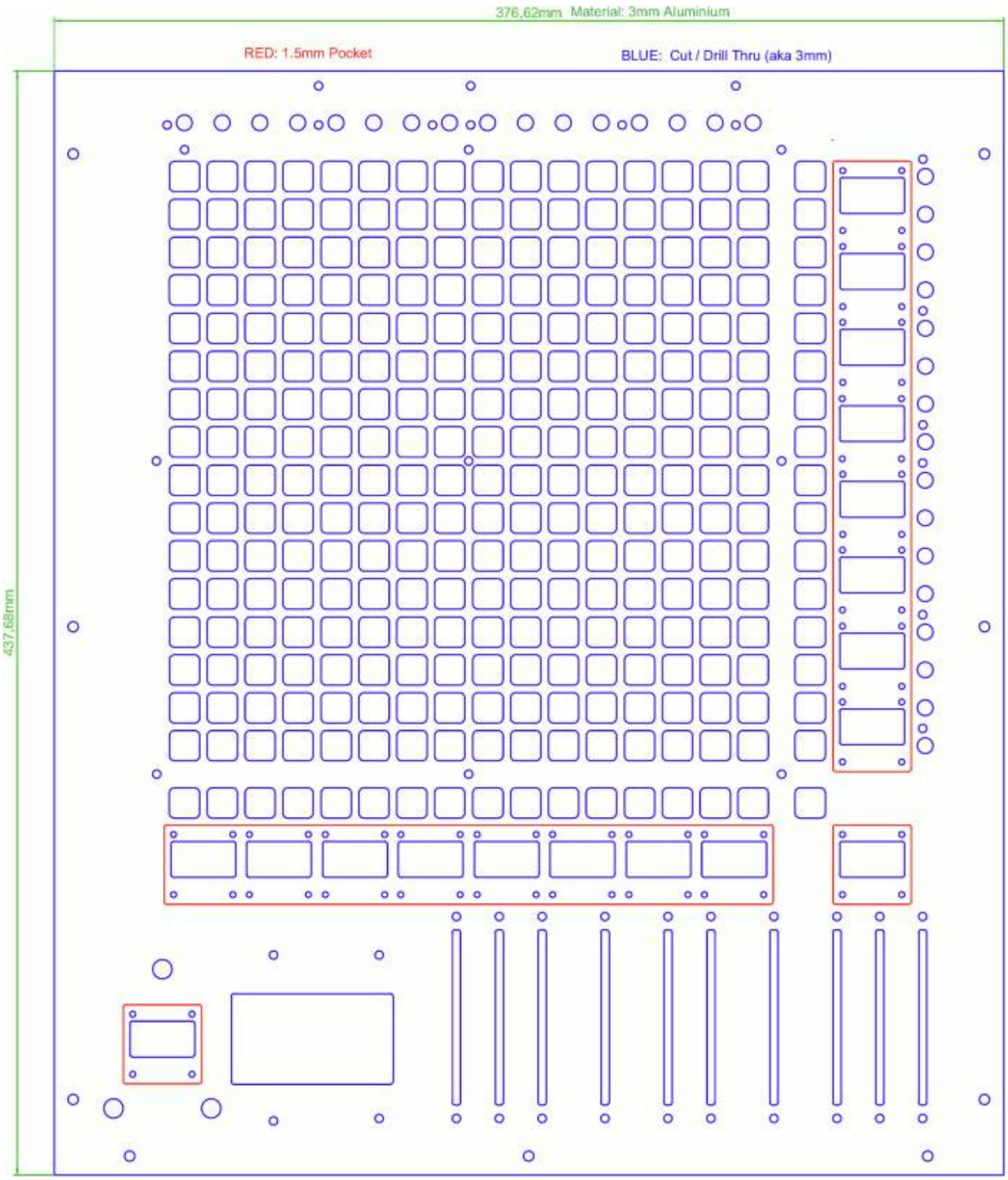

Backpanel

tm5-backpanel.zip

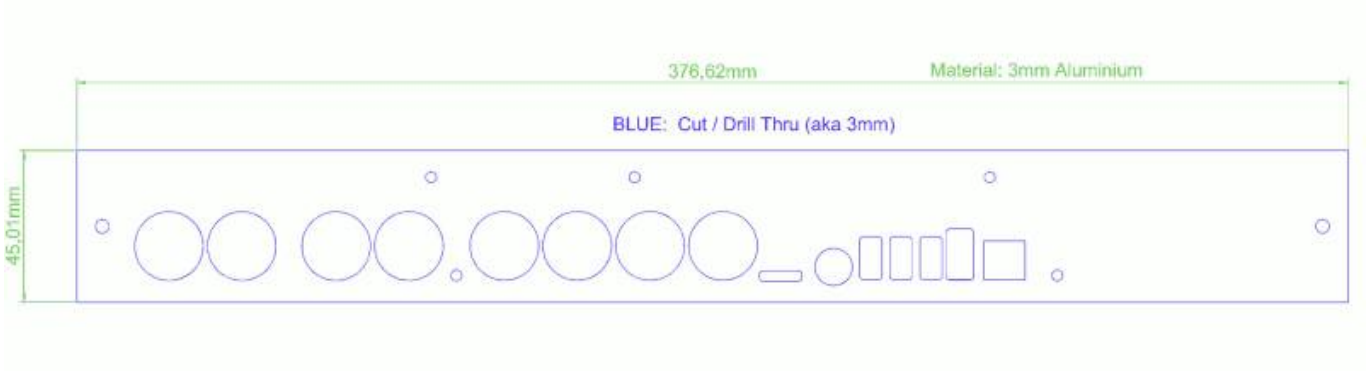

Groundpanel

tm5-groundpanel.zip

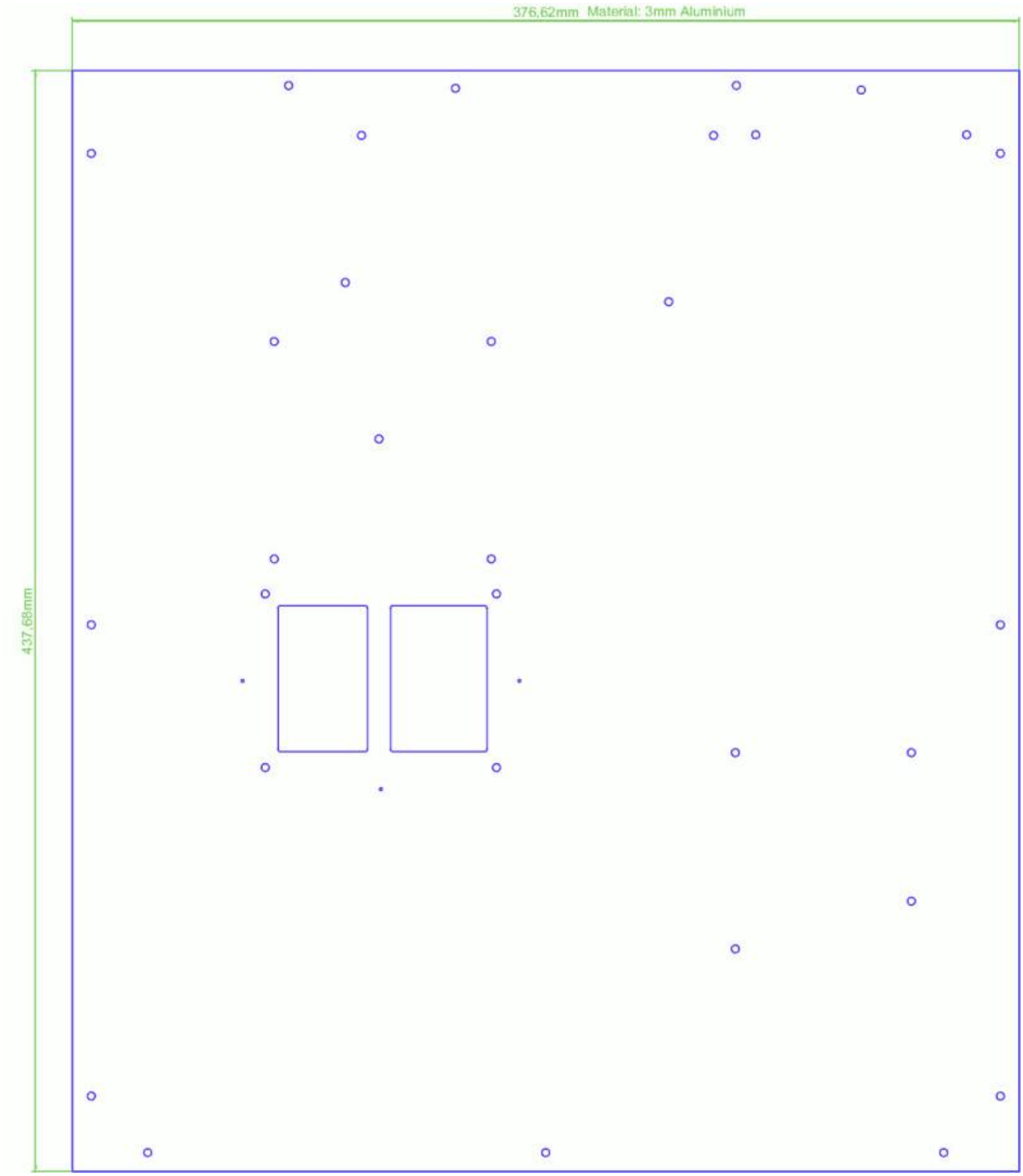

BLM-Acrylic Spacer

optimized file for Formulartm5-blm-spacer.zip
3mm Black Opak Acrylic for example Formulor (EU)
or ponoko (US)

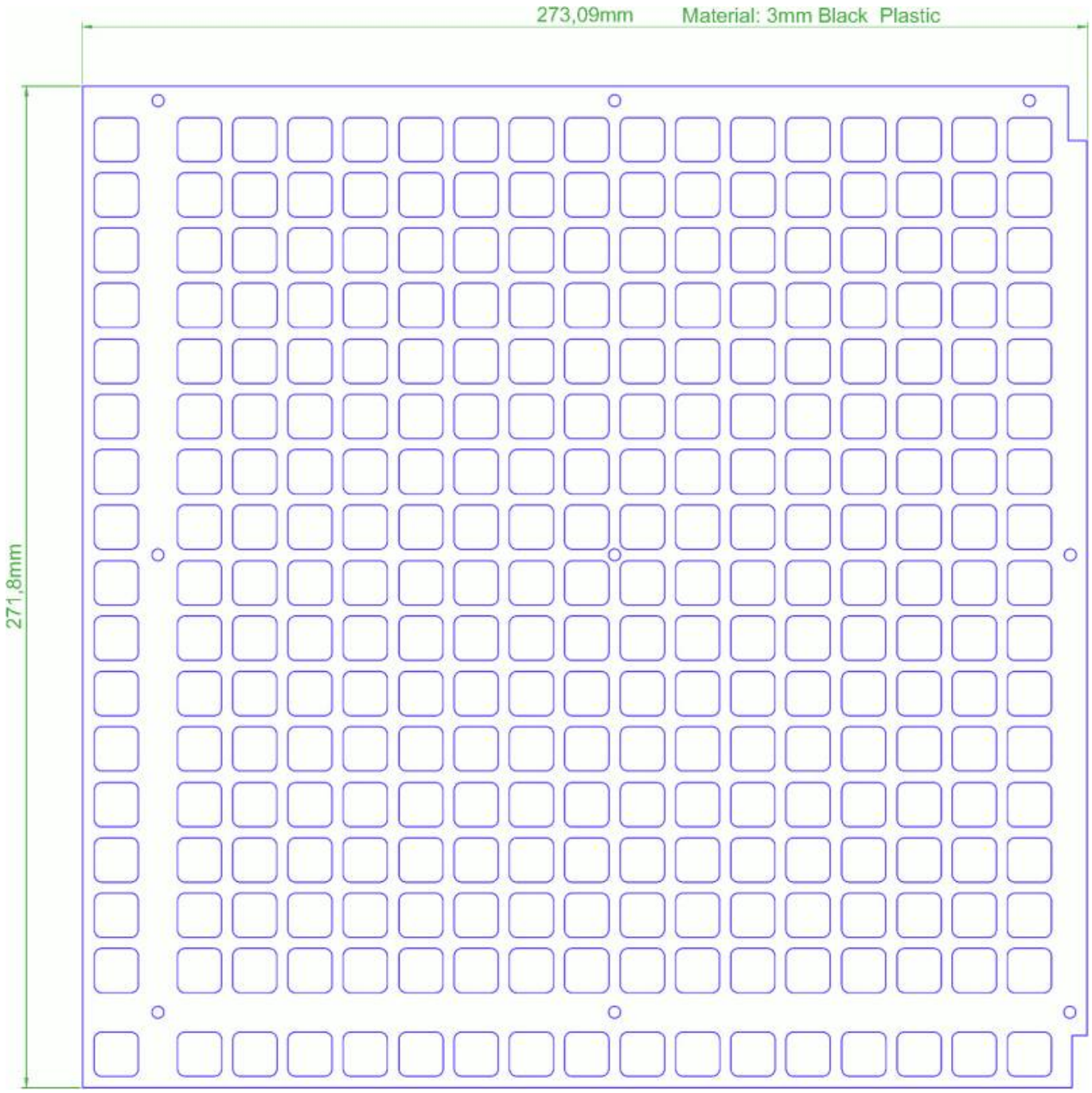

Protection-Glass for Screens

use 1mm Clear transparent Precision-Acrylic for example Formulor (EU)
or ponoko (US)

2 Pairs off Protection Screens, optimized for formular: tm5-lcd-protection.zip

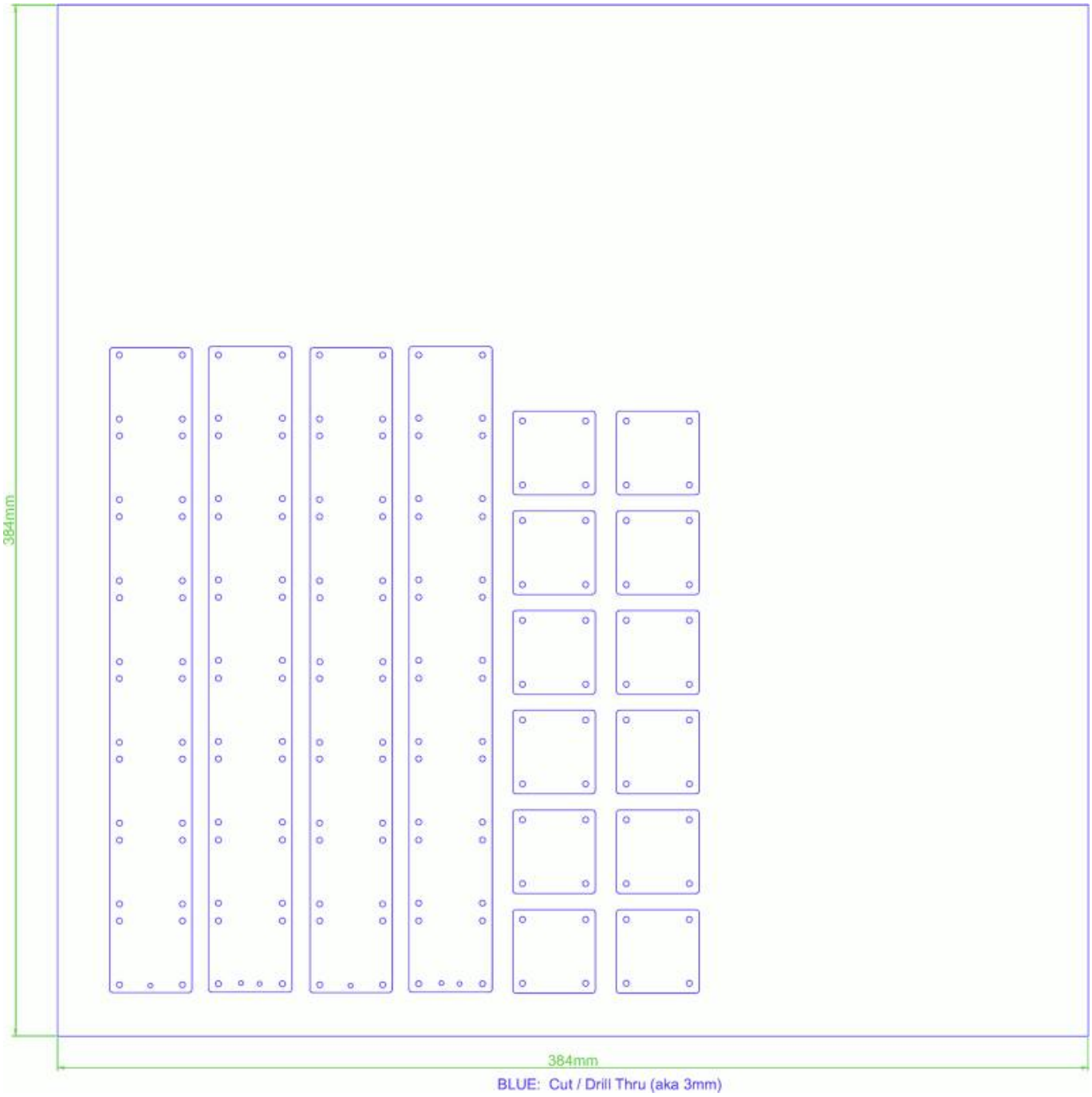

more Protection Screens, optimized for formular: tm5-lcd-protection-mehrere.zip

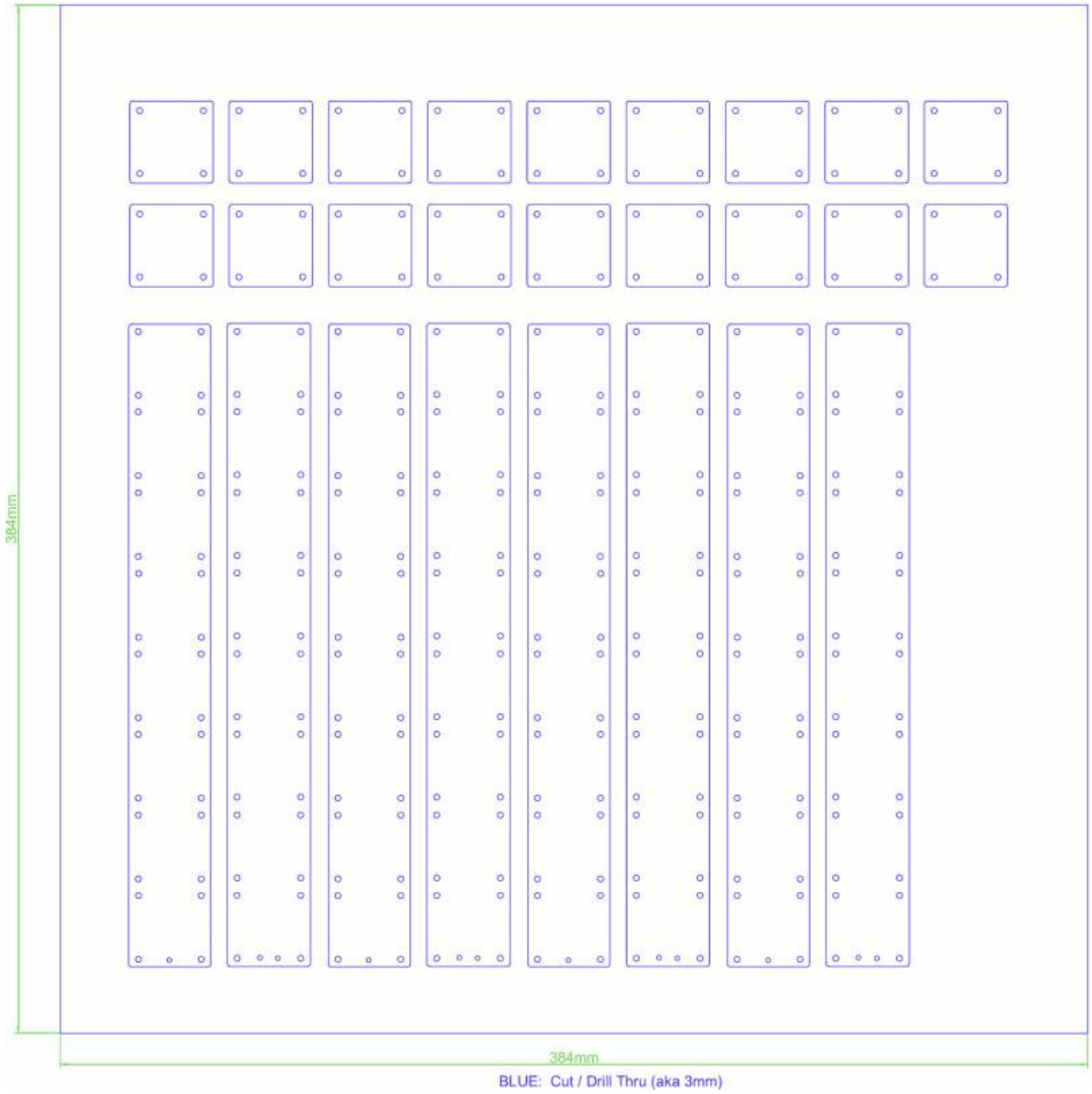
384mm
384mm
BLUE: Cut / Drill Thru (aka 3mm)



Wooden Side Panels

3x Wooden 15mm Panels, DIY or ask your local carpenter or hardwarestore

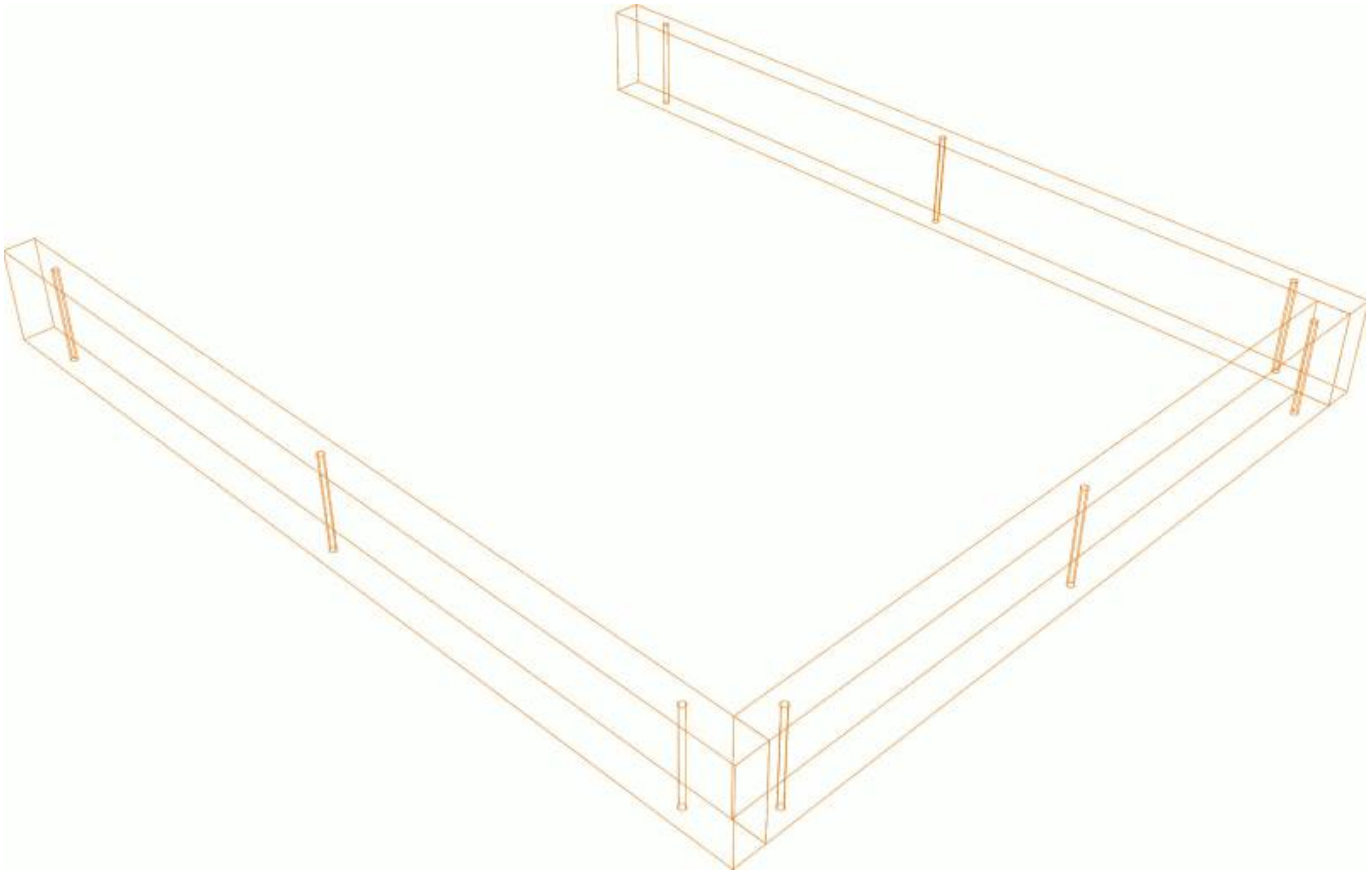

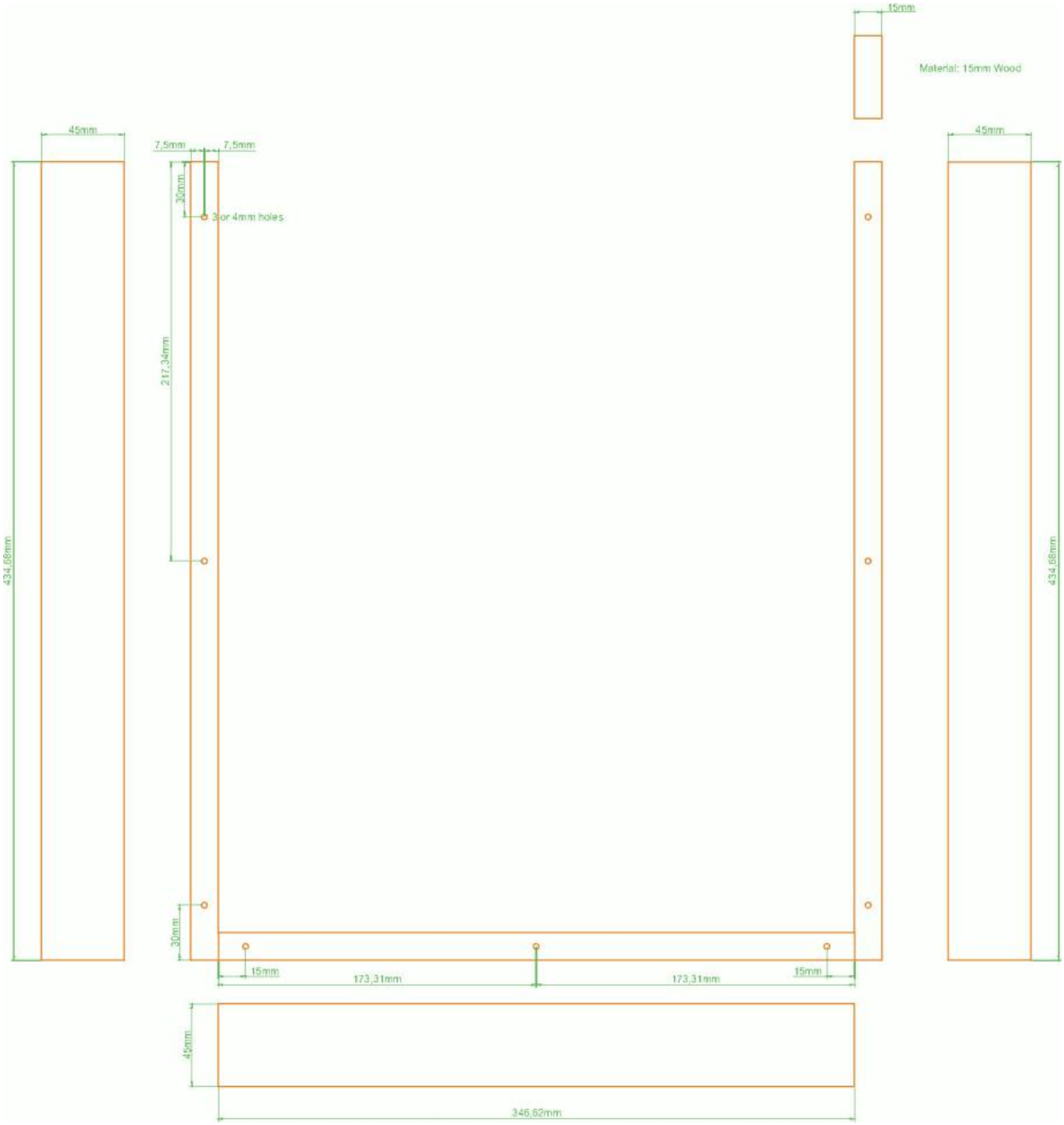

From:
https://www.midibox.org/dokuwiki/ - **MIDIbox**

Permanent link:
https://www.midibox.org/dokuwiki/doku.php?id=tm5-housing&rev=1673569427

Last update: **2023/01/13 00:23**