ultracore group buy # 2

this is the second round of the ultracore group buy. image is below. pcbs are $16 USD plus shipping to your location. last time, shipping prices were pretty reasonable. i could send a few of them to europe for like five bucks or less.

please put your forum nickname and quantity below, and also please update the total. again, i'll be taking payments before i place the pcb order. i'm going to let this run until 2/1/2009. note: this will not work with seq v4!

for a description of what this pcb is, go to http://midibox.org/dokuwiki/ultracore

ultra	2
jimh54	1
Valant	2
Enth	1
raoulblues	2
vout	1
modularkomplex	3
madox	2
meToo	1
Total	15

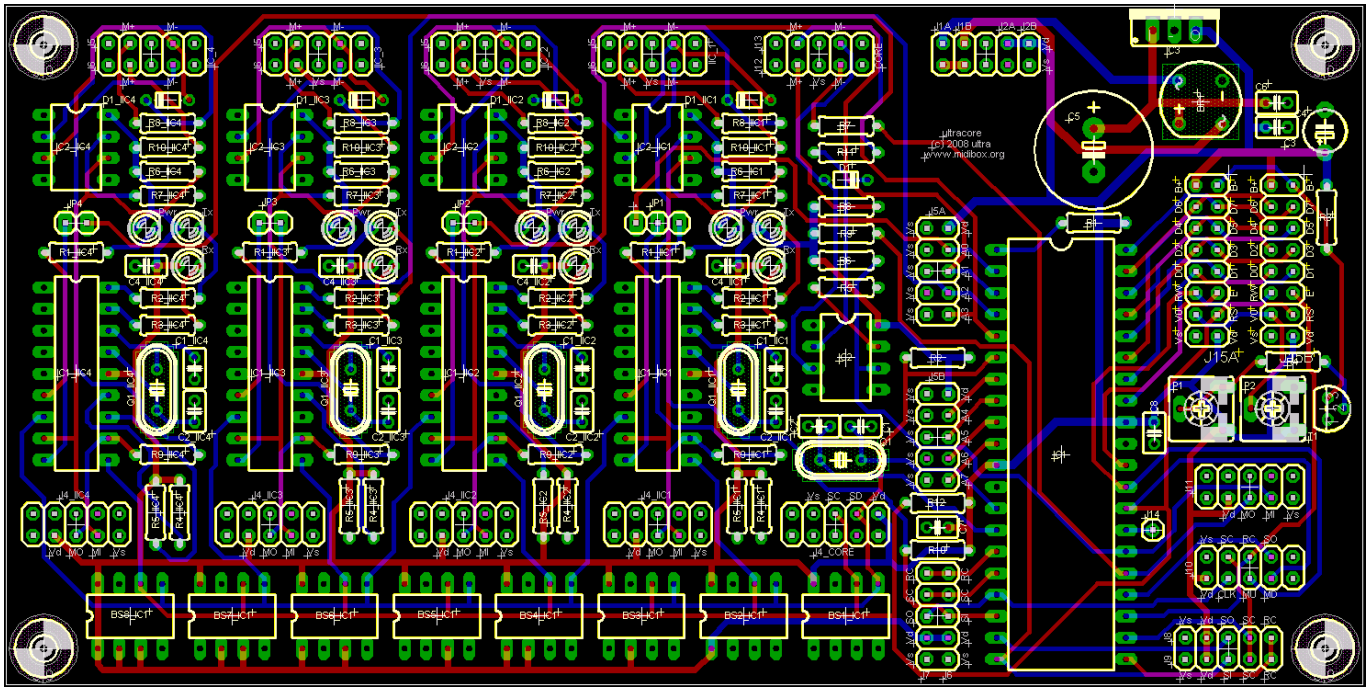

From:
https://www.midibox.org/dokuwiki/ - **MIDIbox**

Permanent link:
https://www.midibox.org/dokuwiki/doku.php?id=ucoregb&rev=1232619537

Last update: **2009/01/22 10:18**