XYZ-IR-Controller

Hack a Alesis PhotonX25 XYZ-Dome-IR controller
or how to DIY



Introduction

The XYZ Dome works with 1 IR DIODE, and 4 IR Transistors, which are connected to 2x Stereo Audio ADC 24Bit running on Wordclock...
I dont know if i can get the Alesis ADCs running (AL1101) - see Datasheet al1101-datasheet.pdf
maybe i only remove the DACs and connect them to J5A!

PCB/Shematic

first a took a shot of the Front&Back of the IR-PCB... then i matched it, and redrawed every path...

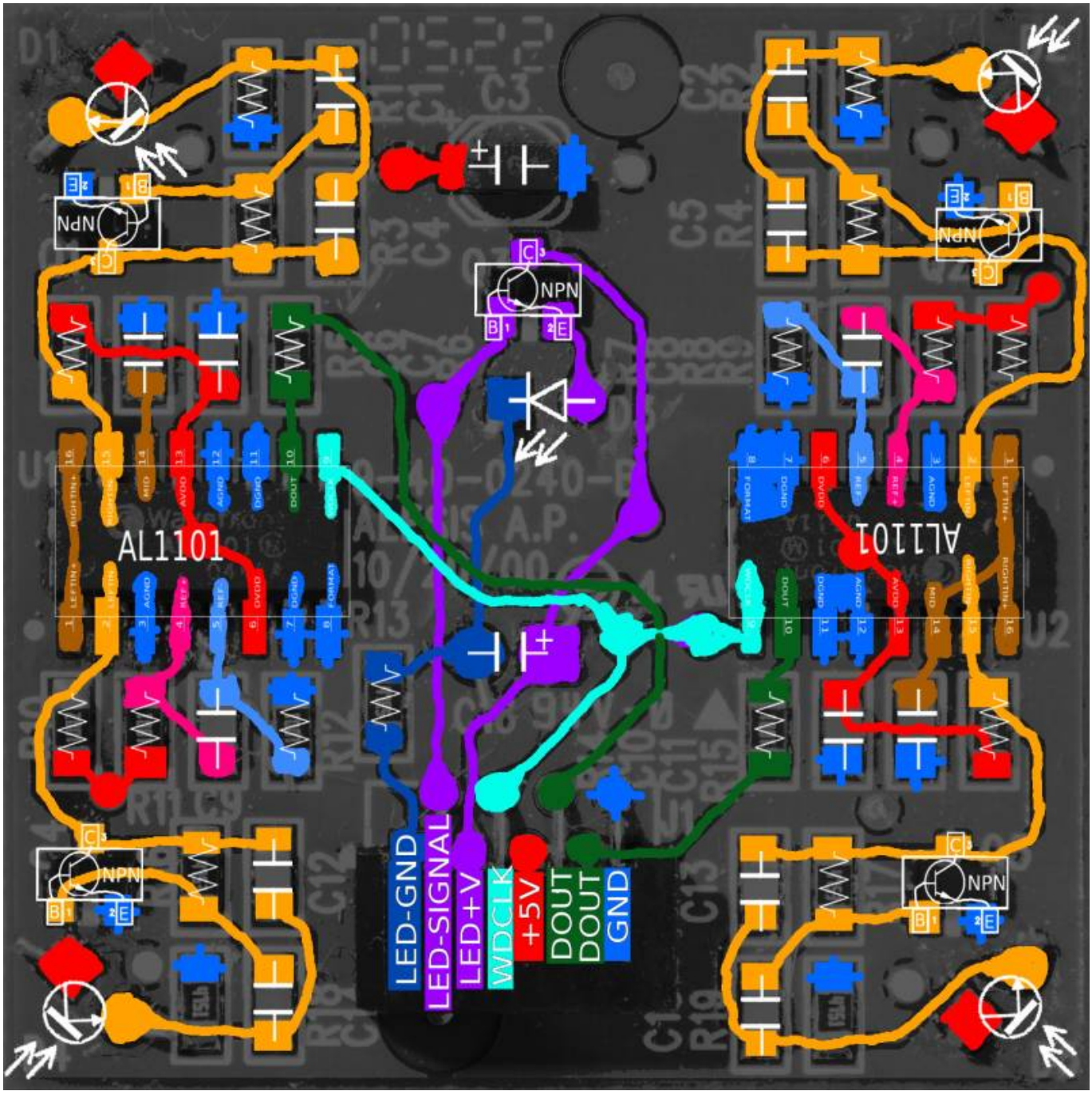

i removed the orginal picture:

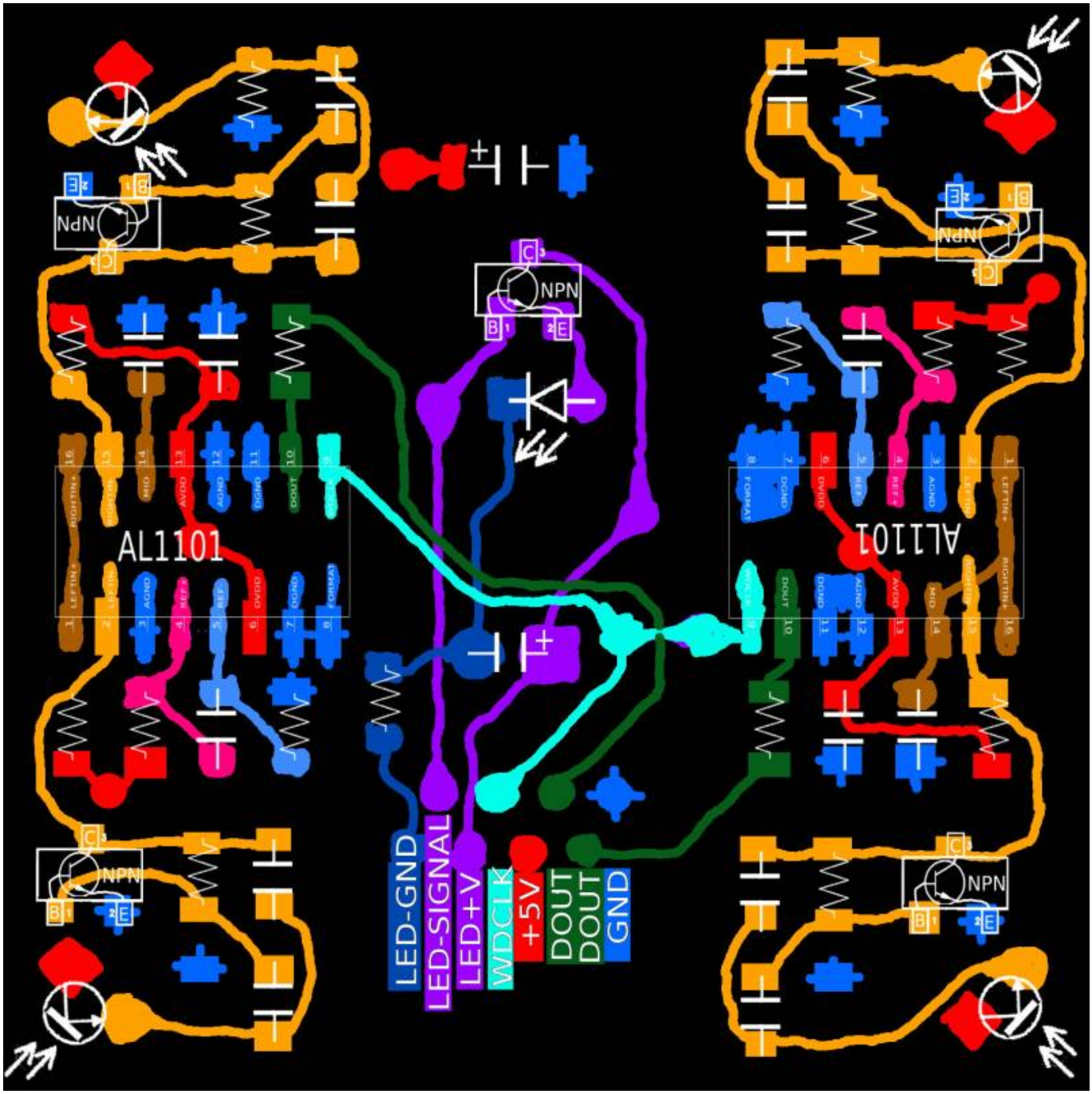

Hardware Requirements

Midibox:

- core32
- 1xMidi IO connect 1 midicontroller and 1 Note/Clock-Source/Destination

To Do

all...!

Community users working on it

- **Phatline** = Programming, Documentation...

From:
https://www.midibox.org/dokuwiki/ - **MIDIbox**

Permanent link:
https://www.midibox.org/dokuwiki/doku.php?id=xyz-ir-controller&rev=1581034748

Last update: **2020/02/07 00:19**